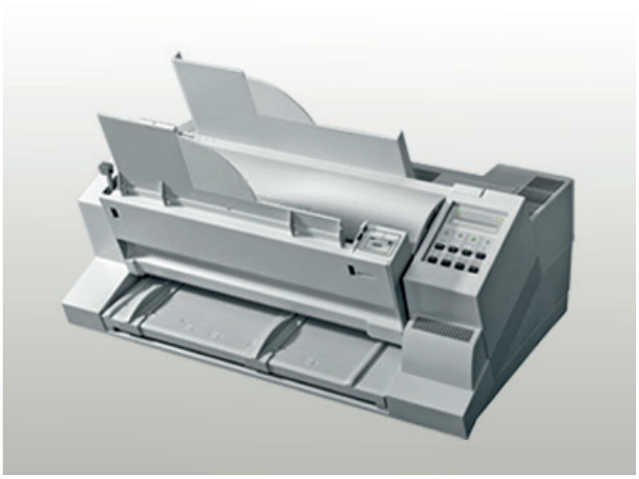

User Manual

PP 404 / PP 405

PSi Matrix GmbH **Freudenberg**

User Manual PP 404 / PP 405

Uwe Panthel - PSi Customer Support

.

A Publication of PSi Matrix GmbH

Hommeswiese 116

57258 Freudenberg, Germany
http://www.psi-matrix.eu

Copyright © April 2021 by **PSi Matrix GmbH**

Great care has been taken to ensure that the information in this handbook is accurate and complete. However, should any errors or omissions be discovered or should any user wish to make suggestions for improving this handbook, please feel encouraged to send us the relevant details.

The contents of this manual are subject to change without notice. Copyright © by PSi Matrix GmbH.

All rights strictly reserved. Reproduction or issue to third parties in any form is not permitted without written authorization from the publisher.

Safety Regulations

The printers PP 404 (Fanfold Printer) and the

PP 405 (Multifunction Printer) fulfil the safety regulations according to IEC 62368-1 for Information Technology Equipment.

The mains cable must be connected to a ground protected wall-socket. The indicated voltage of the printer needs to agree with the local voltage.

The power plug must be easily accessible at any time so that it can be disconnected immediately in case of danger or for maintenance purposes.

Comme le câble de secteur sert de dipositif d'arrêt-urgence, sa connexion à l'imprimante doit être tout le temps accessible.

Before installing the printer, check the surrounding conditions in which the printer will be placed (see next page, Operating Environment and chapter 2).

During a thunderstorm you should never attempt to connect or disconnect any data transfer cables.

The power supply should only be opened and checked by authorized personnel. Repairs and maintenance beyond the descriptions of chapter 7 Maintenance may only be attempted by authorized personnel as well. Repairs done inappropriately may cause damage and severe danger for the user.

There are warning symbols to draw the user's attention to possible injuries:

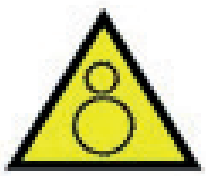

After removing the front cover, this warning symbol becomes visible. There is a risk that you get into the mechanical drive with your finger or an object.

Electromagnetic Compatibility

We certify that the equipment at issue,

- Printer PP 404 (Fanfold Printer) and
- Printer PP 405 (Multifunction printer)

- corresponds to the law regulations ruling electromagnetic compatibility of appliances (2014/30/EU) and, therefore, fulfils the requirements for conformity marking with the CE-sign.

To assure the compliance with the limiting values according to the test standards for interference (EN 55032, class B) and noise immunity (EN 55024), shielded interface cables must be used.

This equipment has been tested and found to comply with the limits for a Class A digital device, pursuant to part 15 of the FCC Rules. These limits are designed to provide reasonable protection against harmful interference when the equipment is operated in a commercial environment. This equipment generates, uses, and can radiate radio frequency energy and, if not installed and used in accordance with the instruction manual, may cause harmful interference to radio communications. Operation of this equipment in a residential area is likely to cause harmful interference in which case the user will be required to correct the interference at his own expense.

Changes and modifications not explicitly allowed by the equipment‘s manufacturer could void the user‘s authority to operate the equipment.

Changes et modifications pas expressément approuvés par le producteur peuvent dévaluer l‘autorité d‘opérer l‘équipement.

Operating Environment

Avoid installing the printer where it is exposed to moisture or heat (eg. direct sun light).

- Temperature: + 10°C to + 35°C (+50°F to +95°F)
- Humidity: 20% to 80%

Slots and openings in the printer‘s housing are provided for ventilation. Always ensure that these openings are not obstructed.

Also ensure that the cables at the rear side of the printer do not interfere with the output paper path.

1. Preface

About this Manual

This manual is covering the two printers

- **Continuous printer (PP 404)**

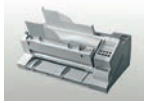

- **Multi-Purpose printer A printer for continuous and single-sheet processing (PP 405)**

The operation and functionality are nearly the same. In most illustrations, the High Speed Fanfold Printer with Cutter is used. In case there are differences in the handling you will find the note:

- **Continuous printer**

  or

- **Multifunction printer**

The Interface (Personality Module (PM)) is an integral part of the printer, and the type of PM used, determines the functionality of the printer especially regarding the user and system interface.

The manual is divided into the following chapters:

1. **Preface** About the manual
2. **Getting Started**
3. **This chapter explains how to unpack and set up the printer and how to install the personality module (for the multifunction printer only) and the ribbon cartridge. At the end of this chapter, the printer should be fully functional and tested in its default setting, but not yet specially configured, i. the connection to the computer as well as the setting of the different options has not yet taken place.**
4. Operating the Printer

   This chapter discusses in detail the operation of the operator panel, all menu functions, and the general operation of the menu.
5. Configuration

   Shows how to configurate the printer
6. Maintenance

   Shows how to clean the printer and how to replace the platen and the print head.
7. Trouble Shooting and Diagnostics

   Suggests how to identify and correct simple problems.
8. Option
9. Technical Data All technical details or data about the printer can be found here.

Appendix

A Interface Description

This chapter gives hints about possibilities to connect the printer to the various computer systems and explains particularities depending on the version of the operating system. Additionally, cable connection is illustrated

B **Print examples of the standard fonts**

C Character Set Tables

All printer supported character sets are listed in this chapter

D / E **Control Codes**

- IBM ProPrinter and IBM ProPrinter AGM (4207, 4208 XL24) Emulation.
- EPSOM LQ 2550 / ESC/P2 Emulation

F **Barcode Reference**

Conventions Used in this Guide

The following conventions are used:

Bold Headlines and important information.

Note: Contains special advice to facilitate handling.

Caution: Contains important information to prevent damage of the equipment.

Attention: Information that requires special attention

[ENTER] Key functions are always depicted in brackets or you will find the symbol of the key e.g

Abbreviations and Acronyms

AGC	**A**utomatic **G**ap **C**ontrol
ASF	**A**utomatic **S**heet **F**eeder
EE	**E**astern **E**uropean
CAS	Paper source ASF **CAS**sette
LCD	**L**iquid **C**rystal **D**isplay
LED	**L**ight **E**mitting **D**iode
PH	**P**rint **H**ead
MACRO	User defined group (1 - 4) of Parameters
PM	Interface (**P**ersonality **M**odule)
LQ	**L**etter **Q**uality
NLQ	**N**ear **L**etter **Q**uality
DQ	**D**raft **Q**uality
HSD	**H**igh **s**peed **D**raft **Q**uality

The operation of both printers is almost identical. Most of the illustrations show the PP 404 printer. Differences in handling have special references to the printer PP 404 or PP 404.

2. Getting Started

2.1 Unpacking Fanfold Printer (Content PP404)

Check each item against the check list detailed below. Contact your reseller immediately if any item is missing or damaged.

The printer package should contain the following parts:

- 24-Needle Printer (1)
- Ribbon cassette (2)
- Powercord (3)
- Quick Reference Guide (4)
- Produkt CD with documentation, drivers ect. (5)

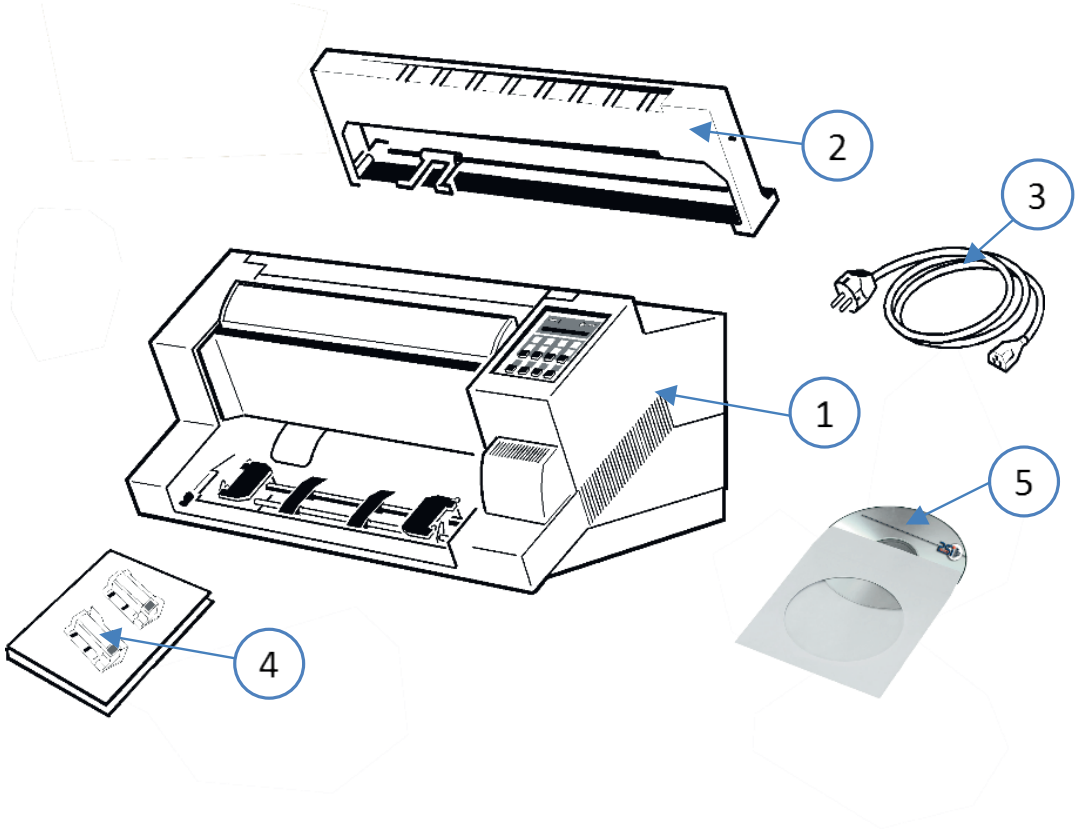

Note: All packaging materials should be for future transport of the printer be kept.

- Do not connect to the mains until the main‘s voltage setting has been checked
- The transport lock has been removed.
- The printer drivers for Windows ® are available on the enclosed CD-ROM.

2.1.1 A First Look at the Fanfold Printer

Before installing the printer, spend some time familiarizing yourself with the printer.

(1) Printer
(2) Ribbon Cassette
(3) Top Cover
(4) Tractor for Continuous Paper
(5) Paper Supports
(6) Front Cover
(7) Control Panel
(8) Tear off edge
(9) Serial / Parallel / USB Input
(10) Power Cord Socket
(11) Power Switch

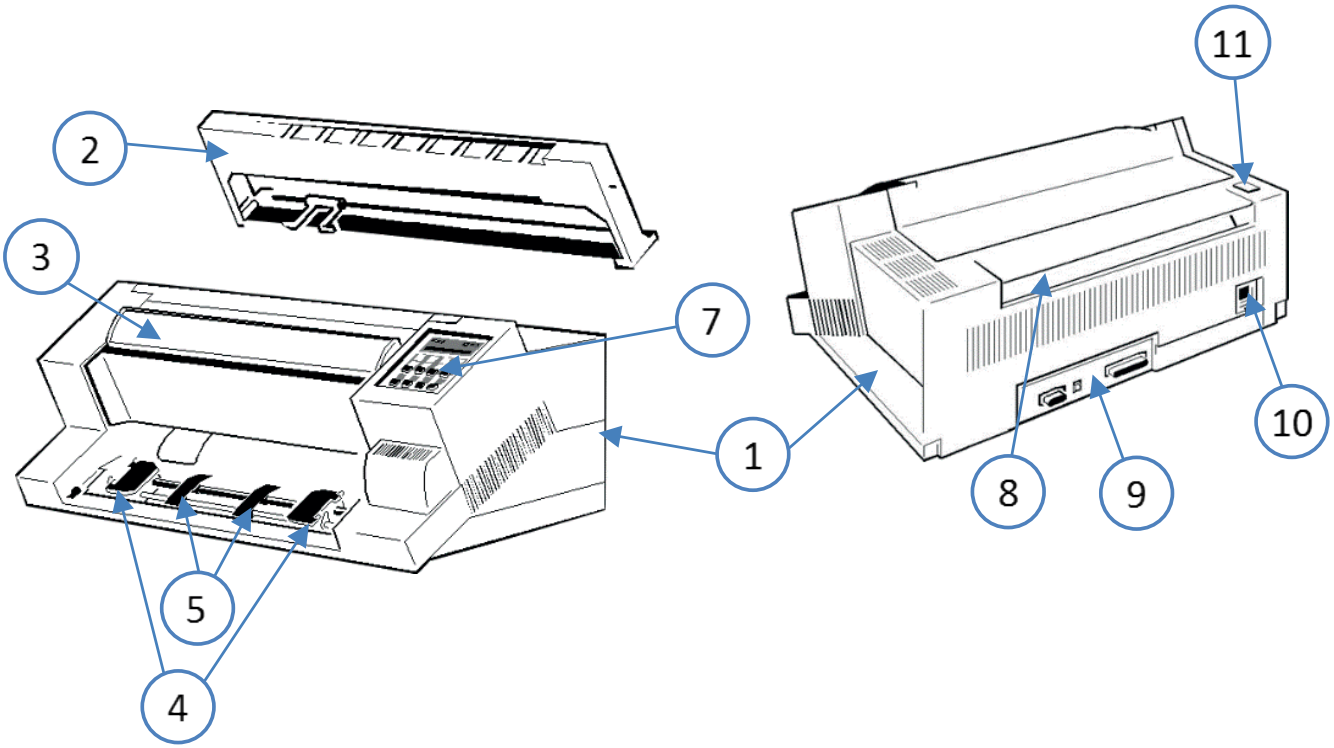

2.2 Unpacking Multi-Purpose printer(Content PP405)

Check each item against the check list detailed below. Contact your reseller immediately if any item is missing or damaged.

The printer package should contain the following parts:

- 24-Needle Printer (1)
- Ribbon cassette (2)
- Powercord (3)
- Quick Reference Guide (4)
- Interface PM (5) (must be ordered separatly)
- Power cord (6)
- Produkt CD with documentation, drivers ect. (7)

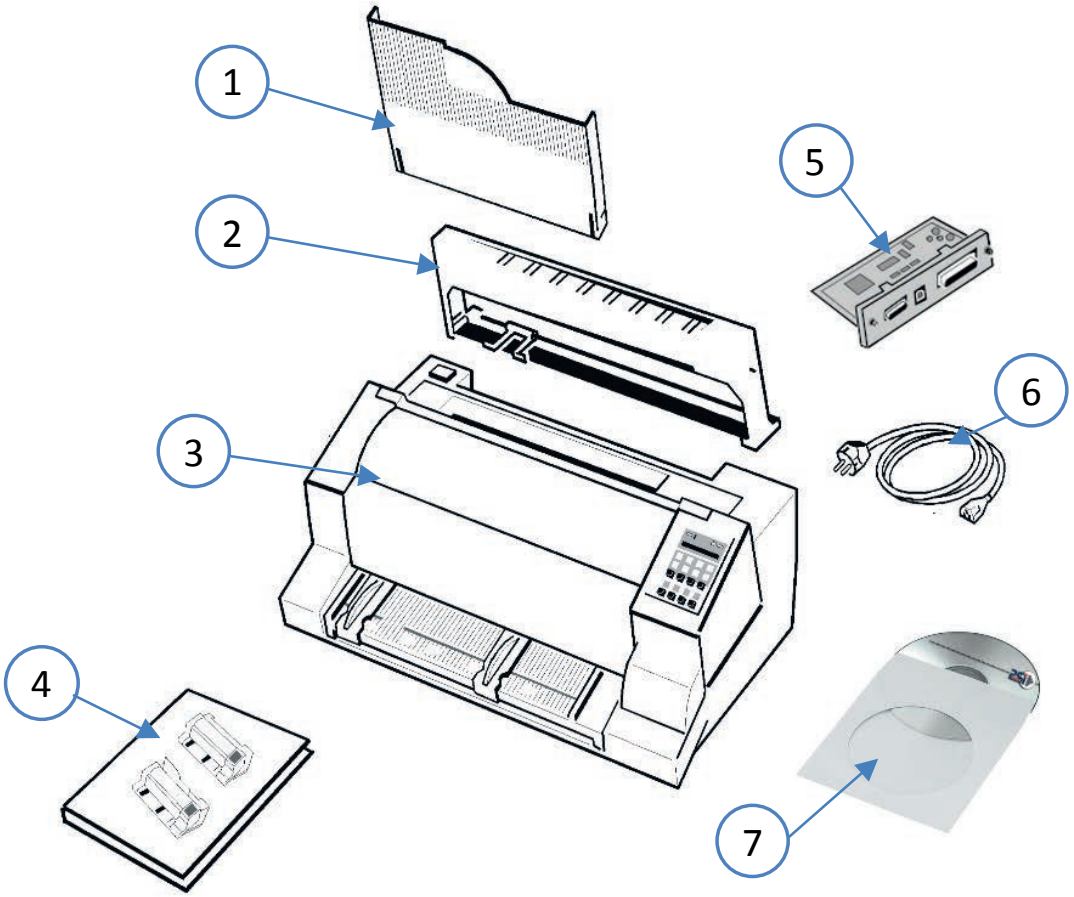

An interface module (5), also called “Personality Module” or briefly “PM”, is in a separate packing and must be ordered separatly.

Note: All packaging materials should be for future transport of the printer be kept.

- Do not connect to the mains until the main‘s voltage setting has been checked
- The transport lock has been removed and the PM is installed.
- The printer drivers for Windows ® are available on the enclosed CD-ROM.

2.2.1 A First Look at the Multi-Purpose printer

Before installing the printer, spend some time familiarizing yourself with the printer.

(1)	Top Cover	(7)	Tractor for Continuous Paper
(2)	Ribbon Cassette	(8)	Stacker support
(3)	Printer	(9)	Power Switch
(4)	Front cover	(10)	Power Cord Socket
(5)	Manual sheet feeder	(11)	Tear off edge
(6)	Control Panel	(12)	Personality Module (PM

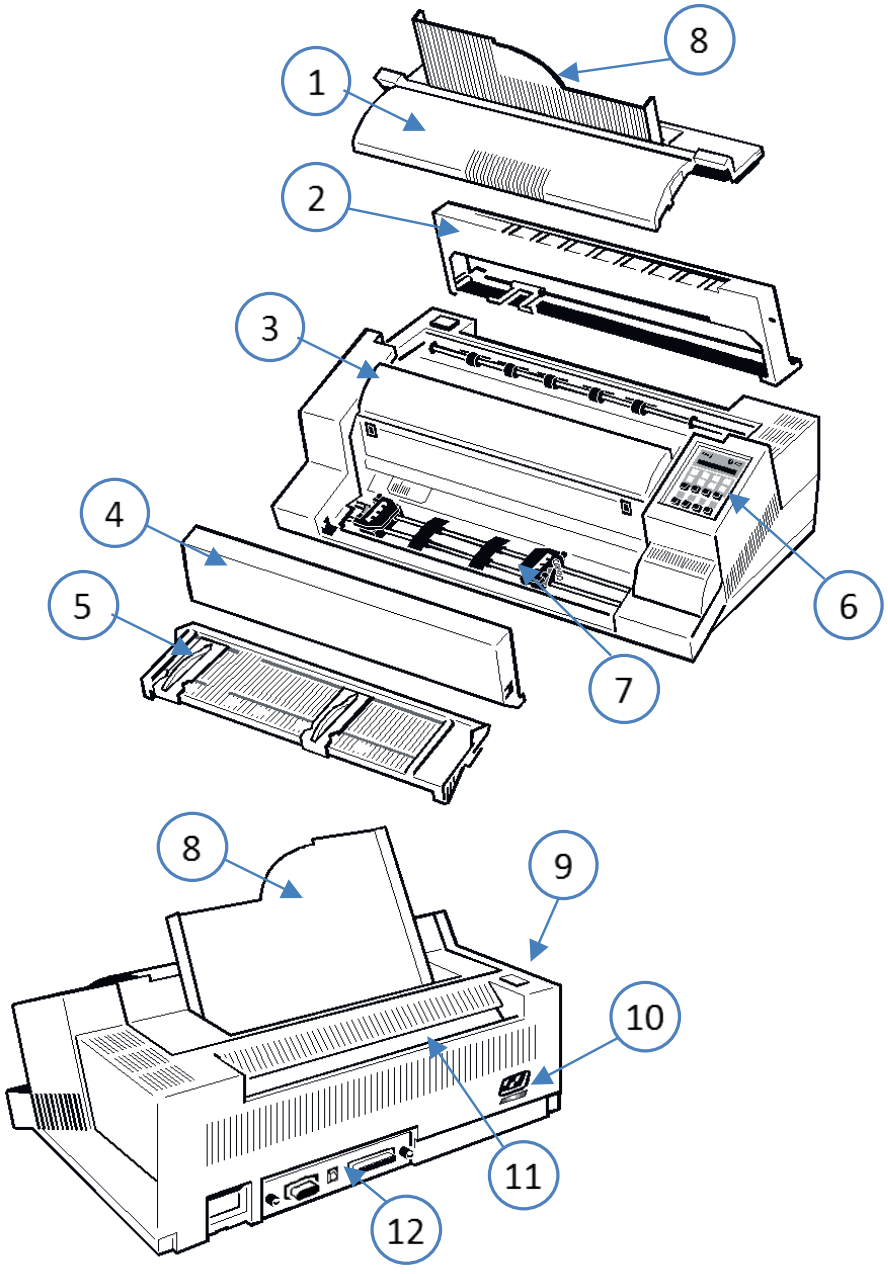

2.3 Site Considerations

Environment Conditions

- Install the printer in an area away from any heat source, air conditieiner or streing draught.
- Avoid installing the printer in a dusty or humid environment.

Work Location

- Place the printer on the stand or a flat, solid level area such as a desk.
- Slots and openings in the printer‘s housing are provided for ventilation; always ensure that these openings are not obstructed.
- Always place the printer with its front edge slightly off the edge of the table when processing fanfold paper.
- Also ensure that the cables at the rear of the printer do not interfere with the output paper path.

Power Requirements

- No special wiring is required. A typical office wall outlet is sufficient.
- Do not plug in other equipment besides the printer such as coffee machines, copy machines or air conditieiners into the same wall outlet.
-

2.4 Transport Lock

In delivery condition a red shipping tab is visible under the top cover (1), which is attached with the transport locking clip (2).

Lift up the top cover (1) and remove the transport locking clip (2) from the print head drive belt.

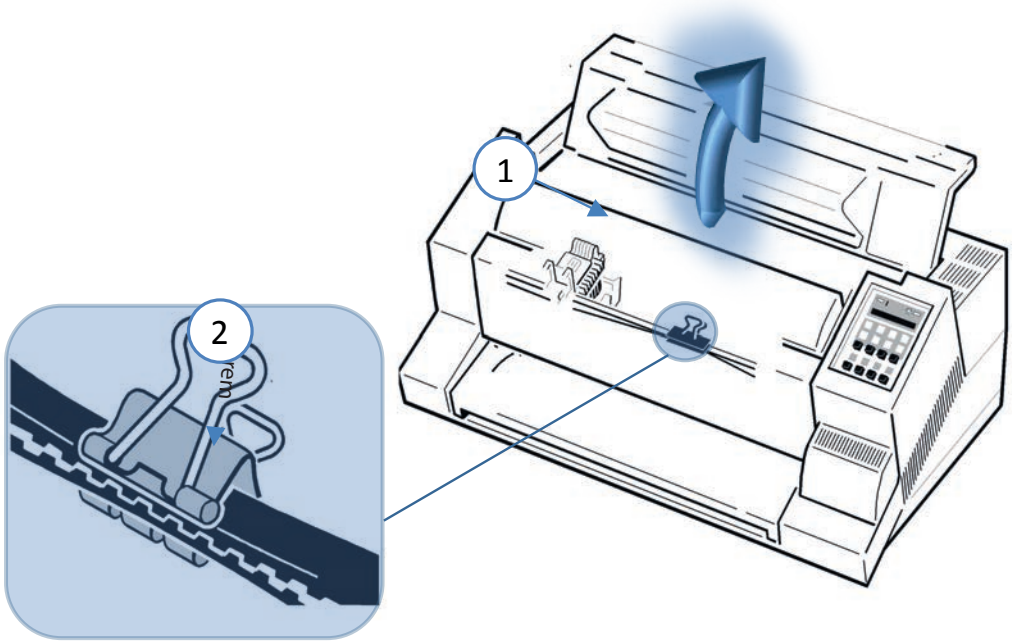

- Carefully remove the red warning strip and the transport securing clip (2).

Repacking Information
Save all packing material and boxes for future transportation of the printer. To ensure maximum protection when transporting the printer, please pay attention to the following:

- Push the output stacker into the top cover and pack it separately.
- Remove the power cord.
- Remove the ribbon cassette.
- Reposition the transport locking clip.
- Pack the complete printer in its original packing box and ship it.

Pay attention to the ‚Packing Note‘!

2.5 Installation of the interface (PM) only PP 405

The printer functions only in combination with an installed interface module, called a Personality Module (PM). The illustration below shows the standard PM with a serial, parallel, and USB interface.

Note: To avoid damage due to electrostatic discharge, do not touch the pins or compeinents of the PM.) Never attempt to install or remove a PM while the printer is switched ON.

The Printer must be powered off! Remove the PM (1) from its packing material. Insert the Personality Module (1) with the compeinent side upwards until the connector fully engages. Hand tighten the two lock screws (2)..

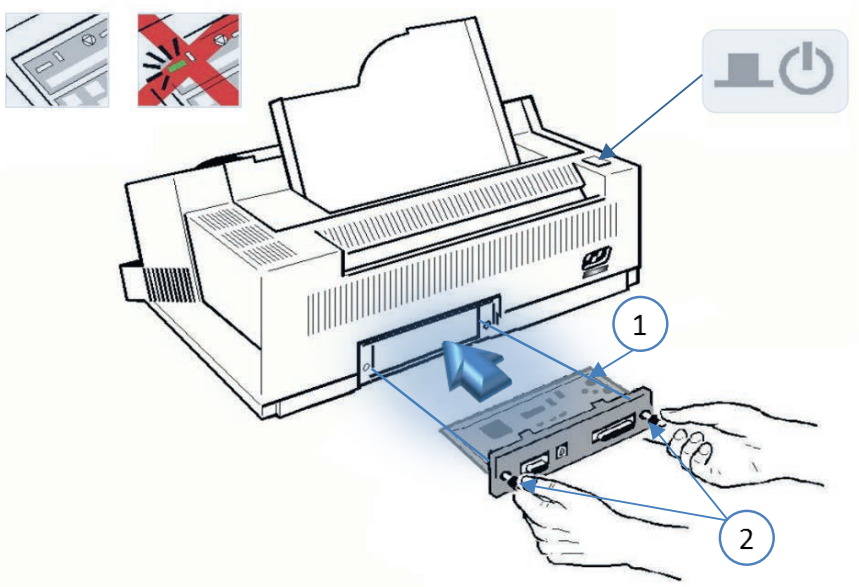

Info: The PM does not beleing to the standard sump of the printer. It must be ordered separately.

PSi provides different variants;

PM SER/PAR/USB

PM SER/PAR/USB/ETH

PM SER/USB/ETH

PM IGP PAR

PM IGP ETH

PM IPDS ETH

2.6 Power supply and power on printer

Mains Voltage
In general, the main‘s voltage selection is determined at factory sites.Make sure that the specified voltage on the label (1) corresponds to your main‘s voltage:

The 230 V setting applies to the range of 180 to 264 V alternating current.

Note: Since an incorrect voltage selection can seriously damage the printer, please pay special attention to the following.

MAke sure that the printer is powered off by power switch (3). Connect the printer to the mains using the power cord (2). First connect the cable to the power cord socket and then to the mains.

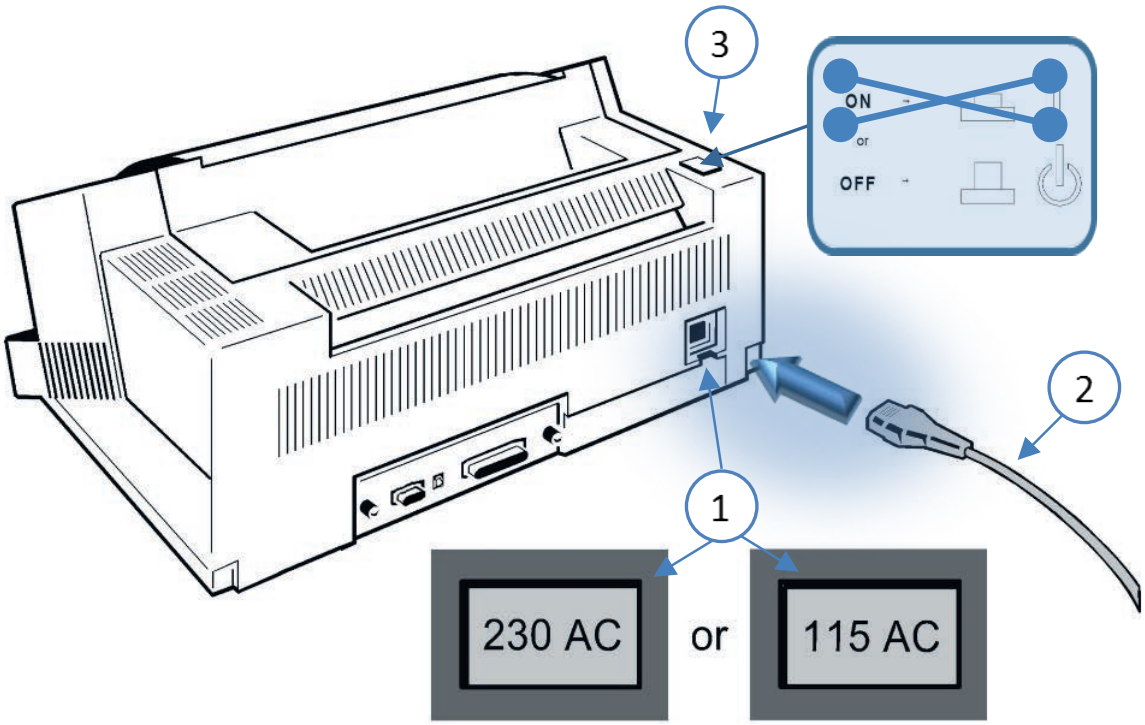

Note: As the power cord serves as a safety cut off, its connection to the printer must be accessible any time.

2.7 Power ON/OFF

The power ON/OFF switch (1) turns the printer's power supply ON or OFF.

After switched ON the printer an internal self-test which checks the electronics, the print head carriage movement and the interface will be performed.

At first the yellow LED on the Operator Panel is lighting up and the display shows TEST.....0.1 (bootstrap). In the next step the yellow LED will be dark, the green LED lights up and the display shows TEST....FW..0101234 (version of the firmware).

If the message INSTALL RIBBON is shown, the ribbon must be inserted as described on the following pages or confirmed if already inserted.

After inserting the ribbon press dto continue. When the internal test has been completed successfully the display shows**READY 1 ELQ** or in case data has already been transmitted.

BUSY 1 ELQ

.

Note: If the display shows anything different please refer to chapter 4 Troubleshooting and Diagnostics.

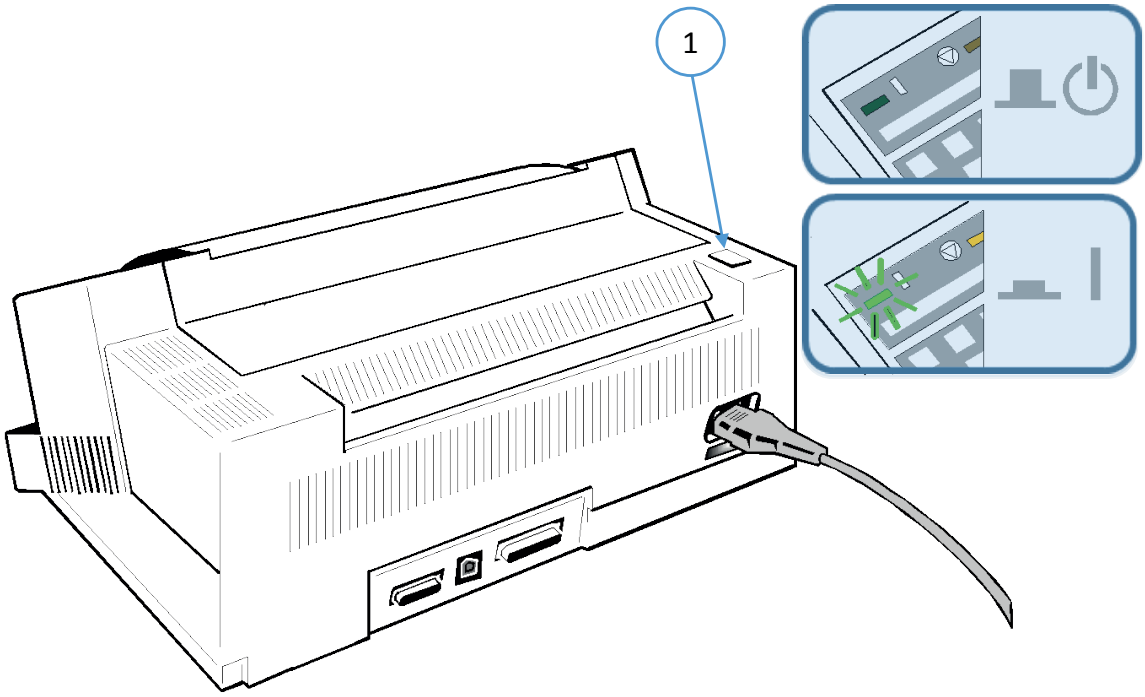

2.8 Installing ribbon cassette

Note: It is recommended to use only original ribbon puts out by our company. Using other ribbons will void your warranty.

Caution: Never manually move the print head fully to the right-hand stop (you could change the way of the paper output).

1. Switch the printer ON at the power switch; Power LED is lit and waits for the message READY 1 ELQ or INSTALL RIBBON.
2. If the printer is busy (message BUSY 1 ELQ) press .
3. Put the ribbon cassette out of the box
4. Remove any excess slack by turning the green knob (1) on the ribbon cassette clockwise. Move the ribbon feed guide (2) to the position indicated on the plastic housing of the cassette

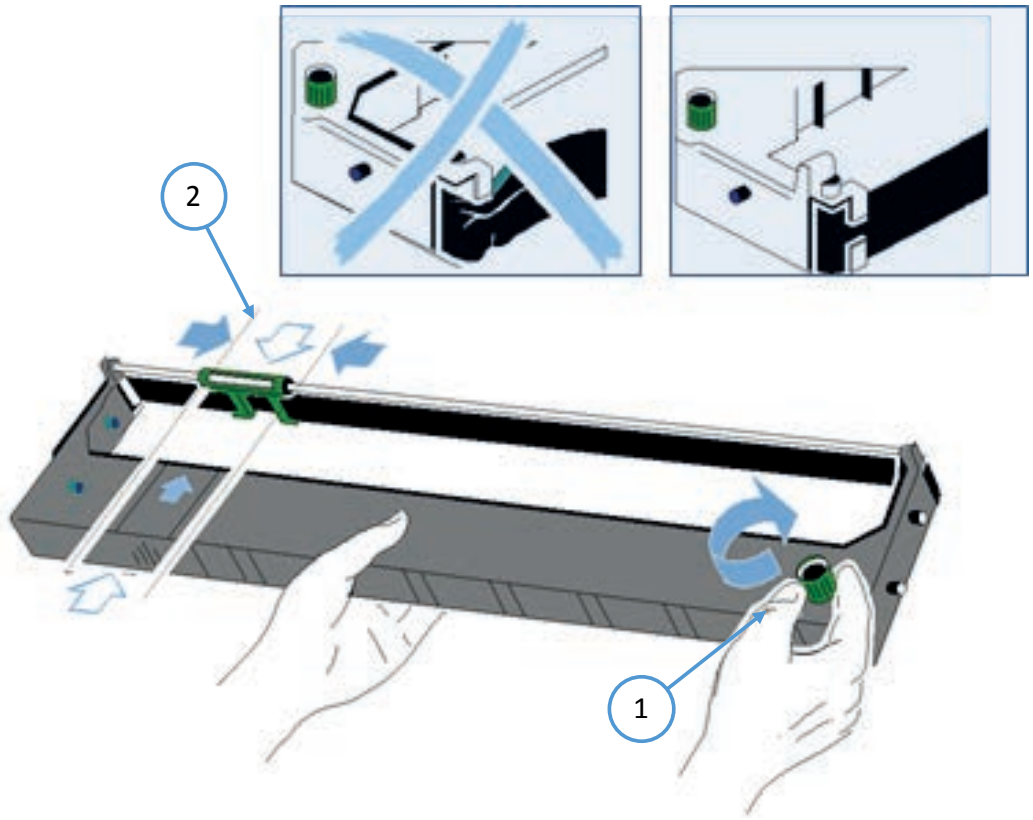

5. Lift the top cover to gain access to the ribbon cassette mountings. The print head will move to the correct position, aligned with the cut out in the paper guide plate to facilitate the installation of the ribbon cassette.
6. Feed the ribbon cassette down into the printer with the ribbon facing down.

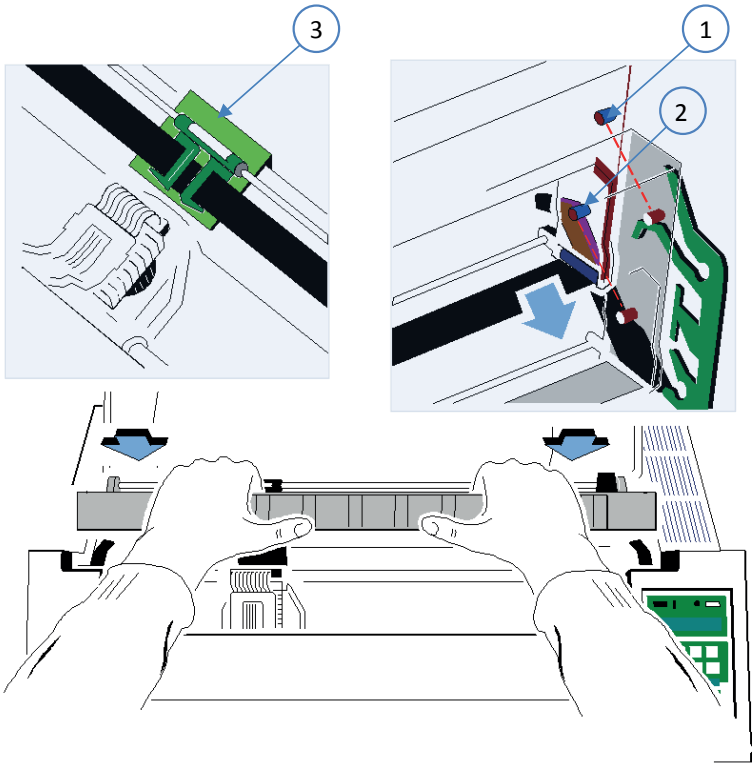

- Then move the cassette towards you until it clicks into place on both sides. Now swivel the ribbon by the green ribbon guide (3) under the print head until the lower retaining pins click (click!).

Note: At each end of the ribbon cassette there are two pins (1) and (2) which keep the cassette in position when mounted.

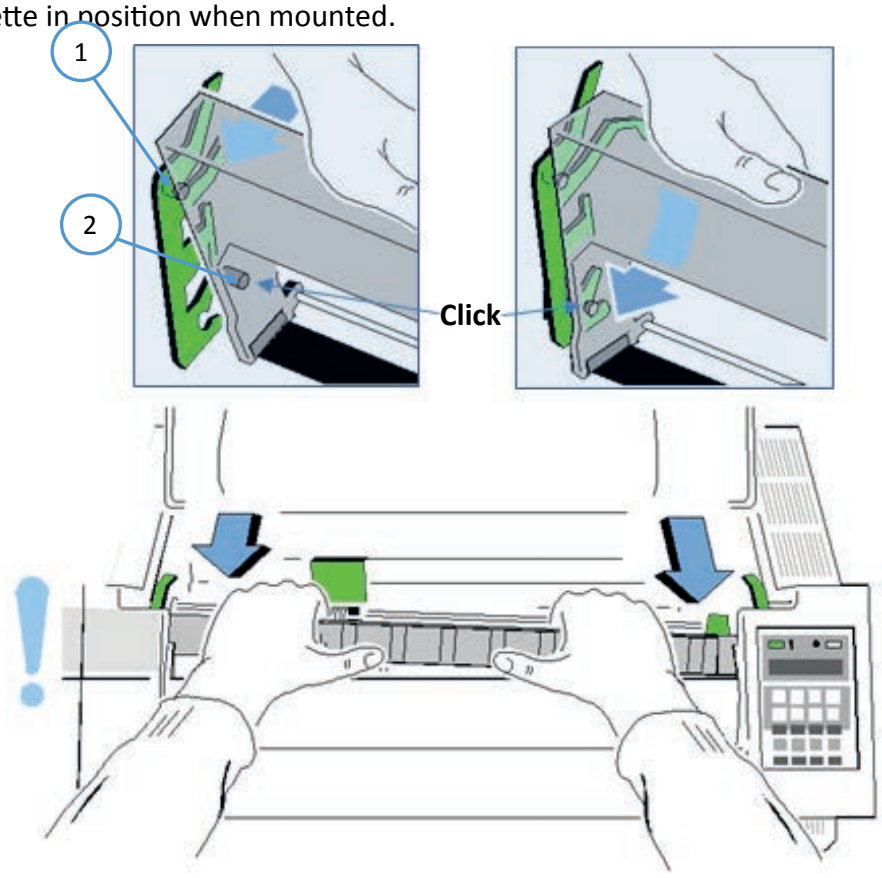

Note: When installed correctly the ribbon cassette is not parallel to the printer‘s housing.

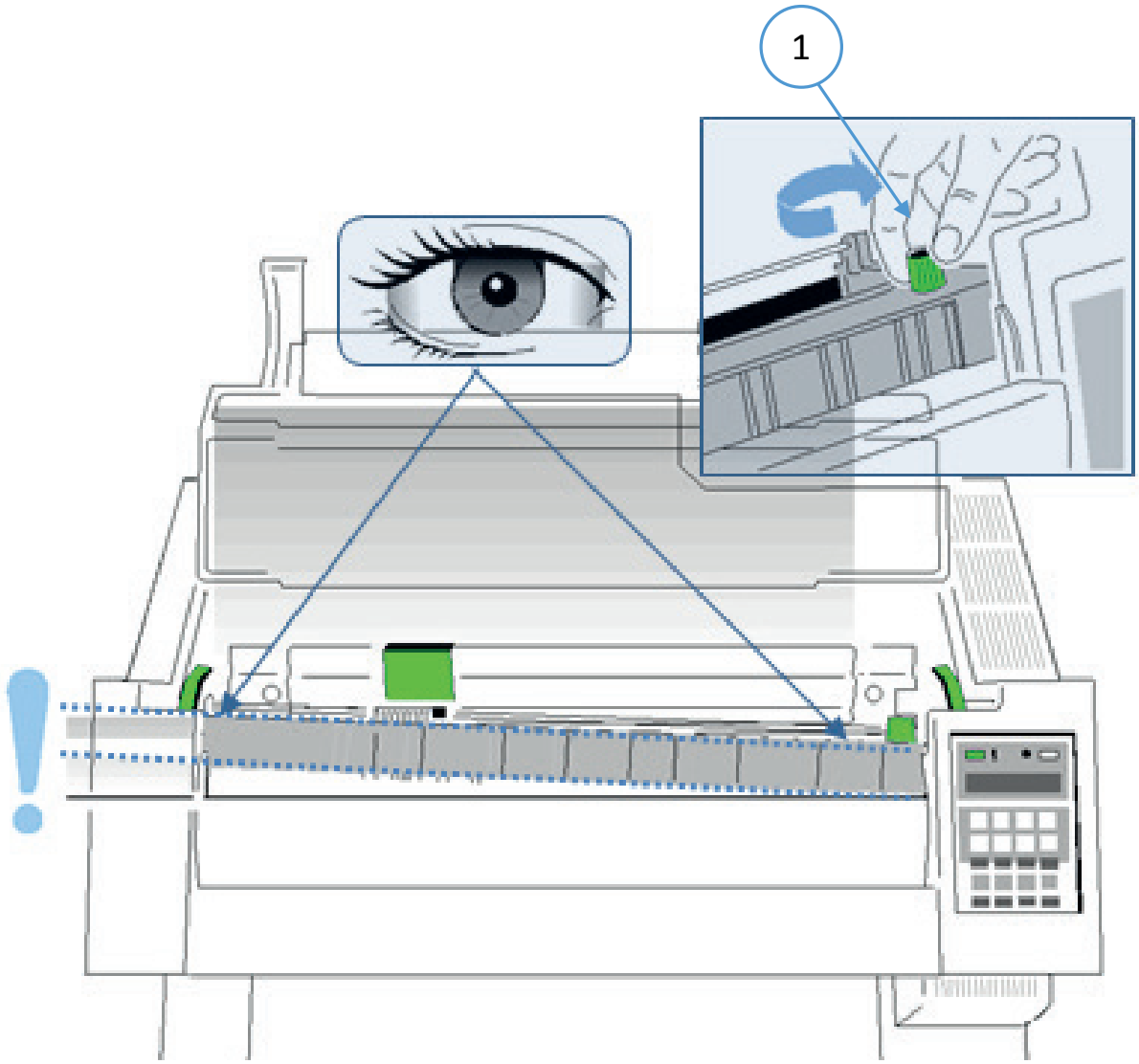

1. Move the print head (4) back and forth to settle the ribbon in the correct position.
2. If necessary remove excess ribbon slack by turning the green knob (6) clockwise.
3. Close the top cover (3) and press .

2.9 Replacing the Ribbon Cassette

Caution: The print head may be very hot immediately after printing!

1. Close the top cover and power on the Printer. After the display shows READY 1 ELQ, open the top cover. The print head (will move to the correct position, aligned with the cut-out in the paper guide plate to facilitate the installation of the ribbon cassette.
2. Now swivel the lower part of the ribbon cassette to the rear.
3. In this way the mounting pins (1) loosen from the lower position.
4. Then press the upper part of the ribbon cassette also to the rear. The upper mounting pins (2) get free and the ribbon cassette can be taken out.

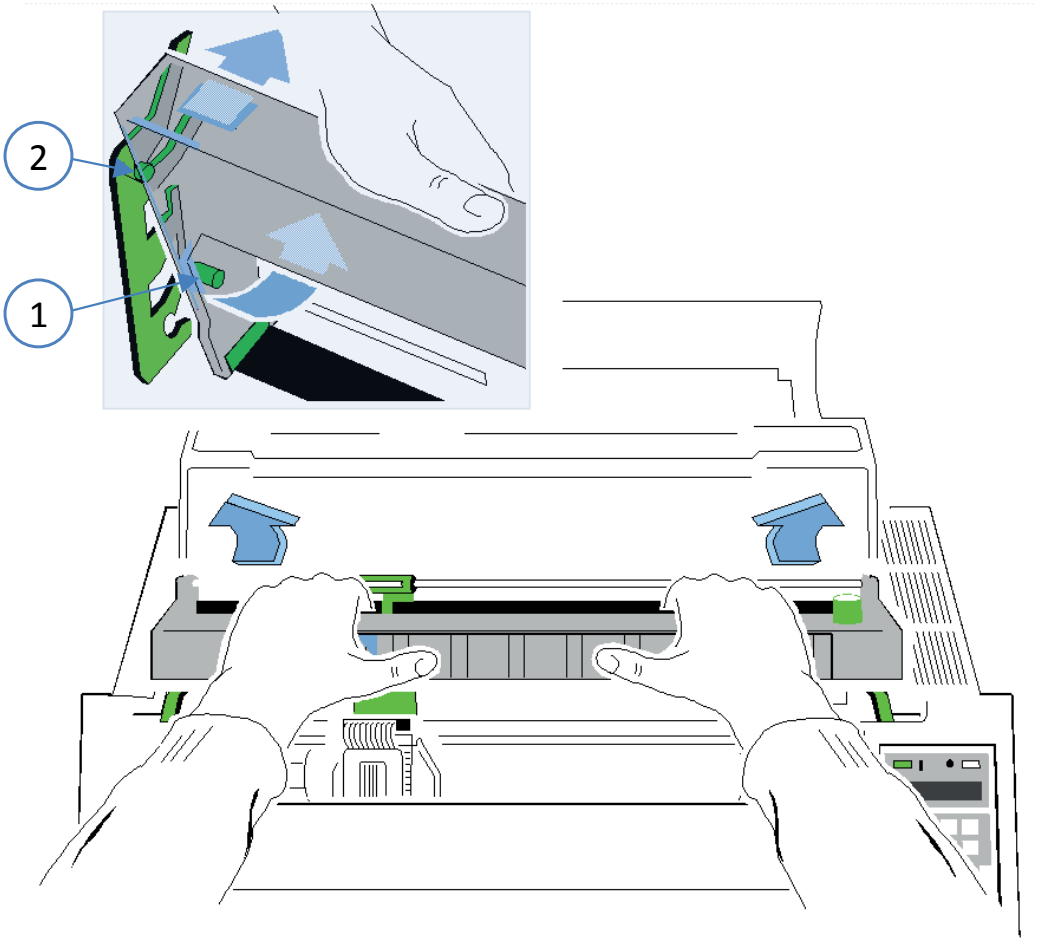

5. To install a new ribbon cassette please see " Installing ribbon cassette".

2.10 Insert Continuous paper

The printer should protrude slightly beyond the front edge of the table or the printer table. Make sure that the path of the paper output is not obstructed by cables on the back of the printer.

Note: (only for the continuous printer) If the optional manual input is used, raise it against the resistance and remove it to the front.

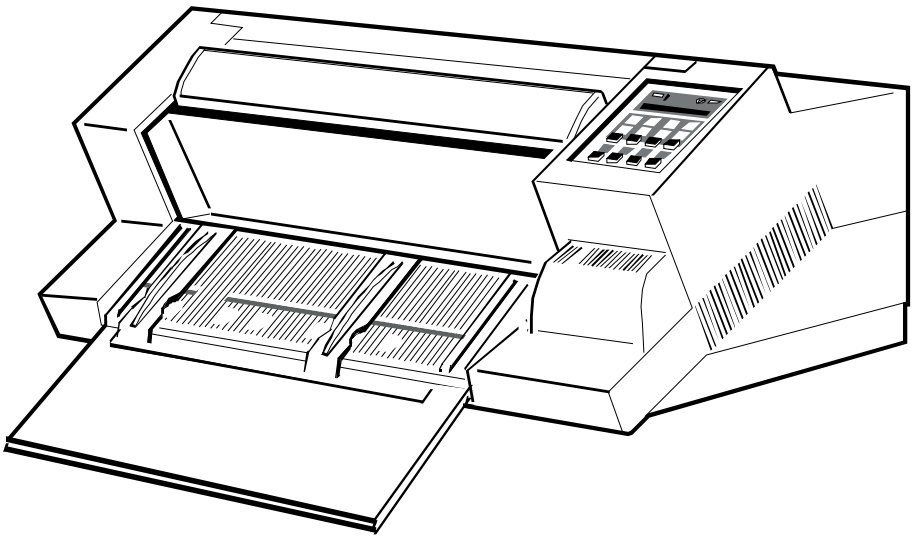

Note: (for multifunction printer only) Hold the manual sheet feeder (1) on both sides of the printer, pull it up against the resistance, and remove it to the front.

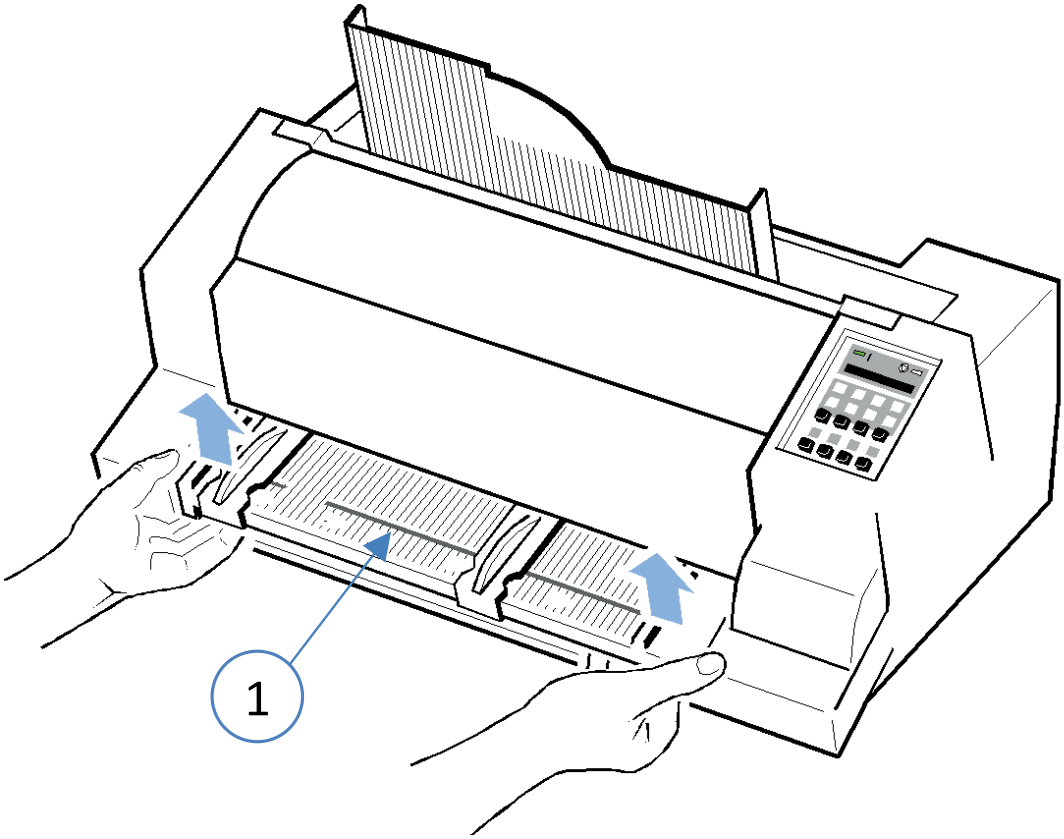

Step 1:

for both Printer:

- Pull the green tractor lock levers (2) toward you to release the tractors.
- Lock the left tractor (1) at the new position by pressing the green tractor levers (2) backward.
- Roughly adjust the right tractor to the paper width, and space out the paper supports (3) evenly.

Note: Only move on tractor base (4) do not pull on flaps (danger of breakage)

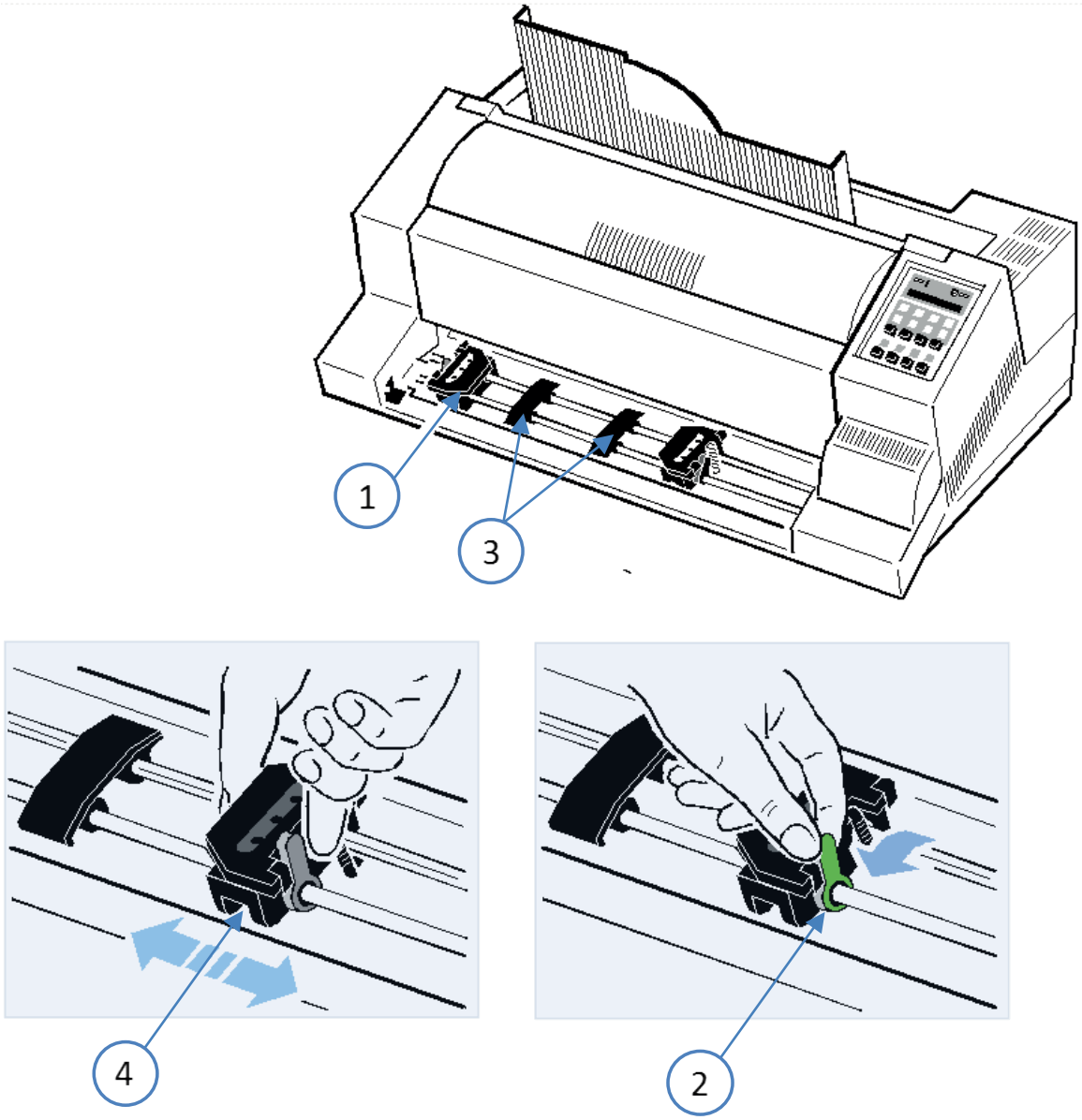

Step 2:

- Open the tractor covers (1) and insert the paper.
- Close the tractor covers.
- Tighten the upper edge of the fanfold paper by slightly pushing the right tractor to the right. Make sure not to stress the paper too much.
- Lock the tractors by pushing back the green lock lever again.

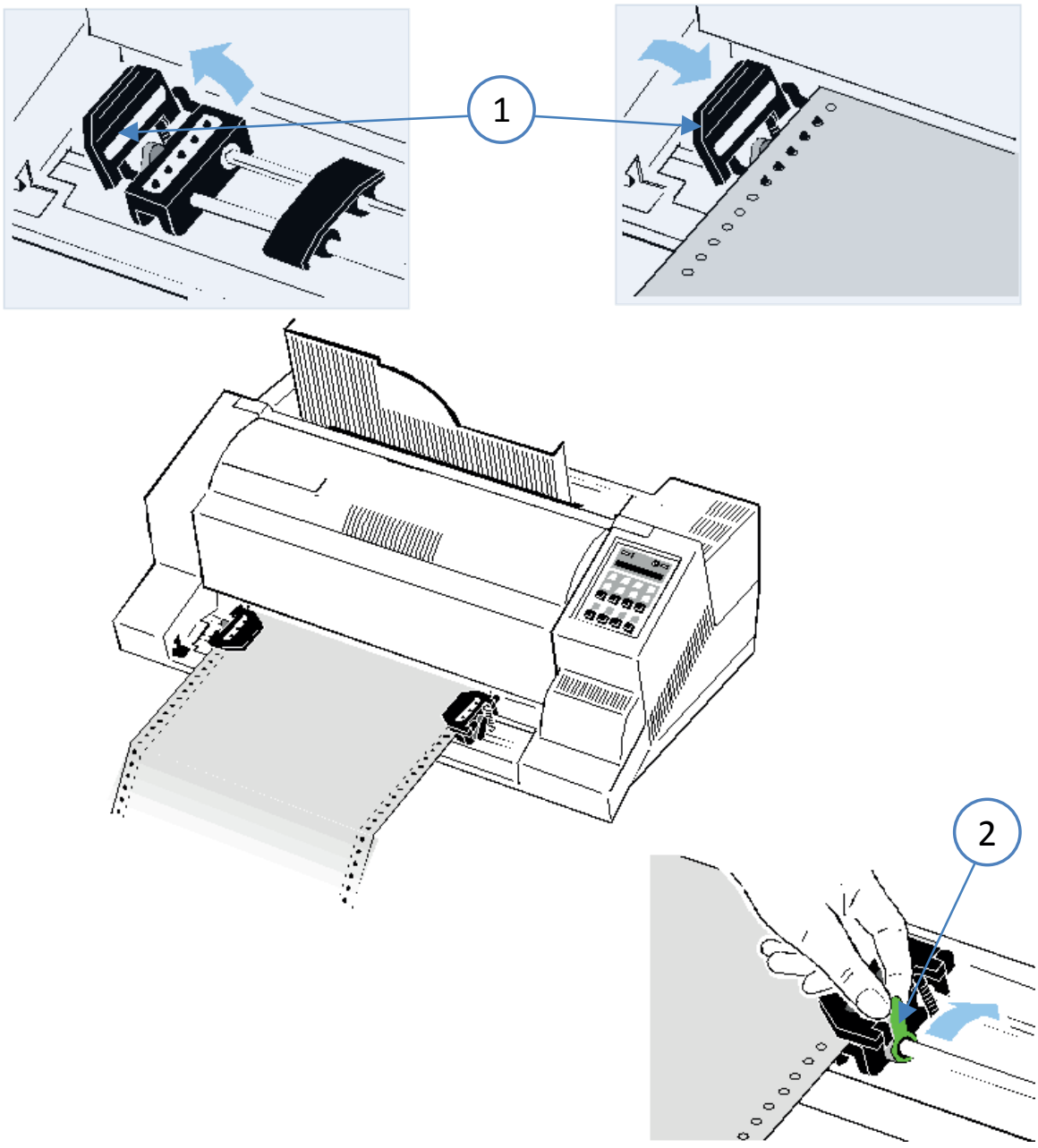

Note: **The paper should be inserted taut, but not overstretched and the transport pins must be in the middle of the transport holes!**

2.11 Manual Front Insertion Guide

Multi-Purpose Printer standard and Continous printer as an option

- Move the left-hand paper guide into the position indicated by ⓪ on the insertion guide. In this setting the margin has the smallest value possible.
- Adjust the right-hand paper guide (2) to the width of the paper to be used.

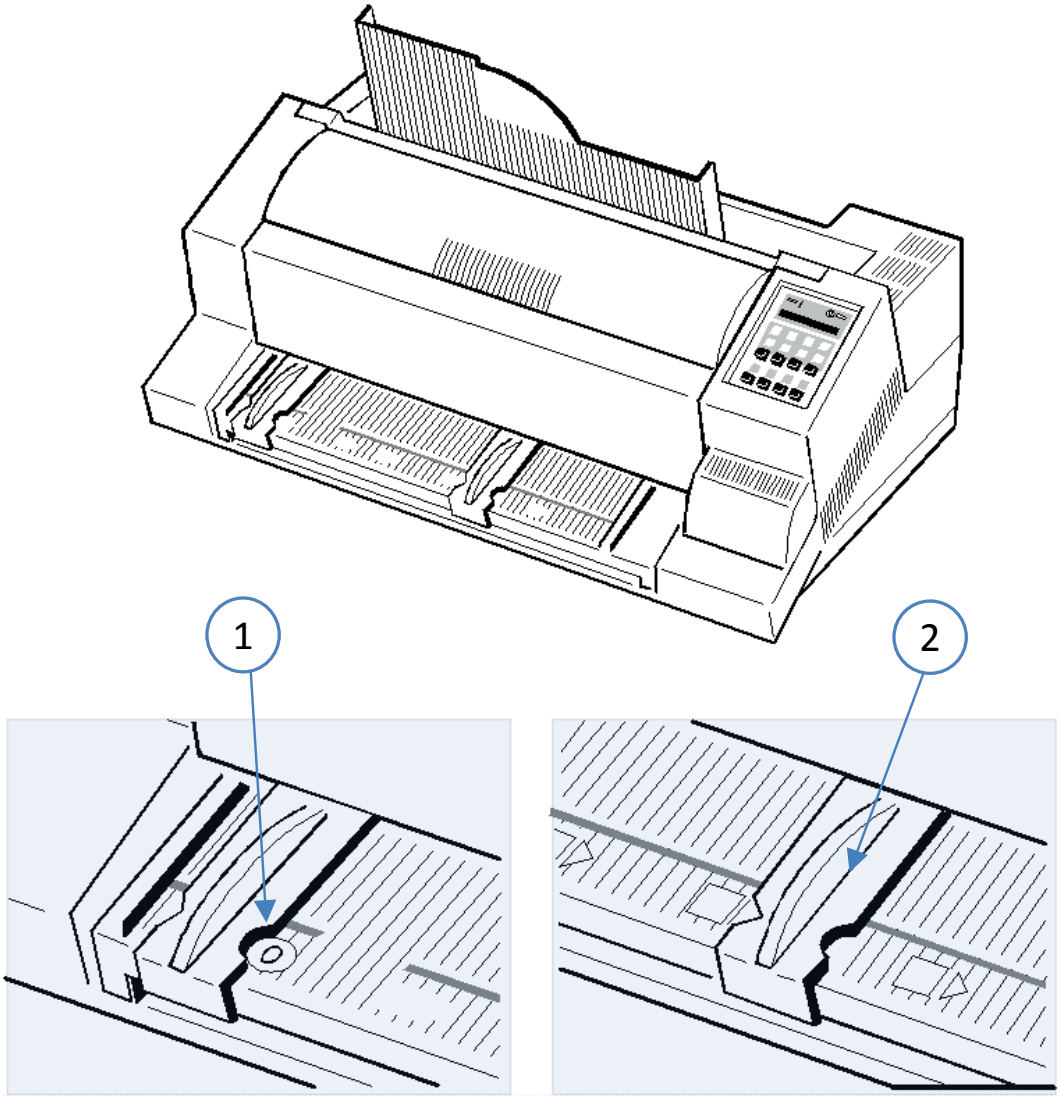

Note: If continuous paper is in the printing position on the roller and has not been torn off, it will advance and the message PAP. Tear off is displayed.

2.12 Paper stacker (Multi-Purpose Printer)

Install the output stacker (1) into one of the two rails in the top cover (2). The meaning of the two Positions:

- for paper with 80 g/m² or thicker use the steeper position (left picture);
- for thinner papers use the less inclined position (right picture).

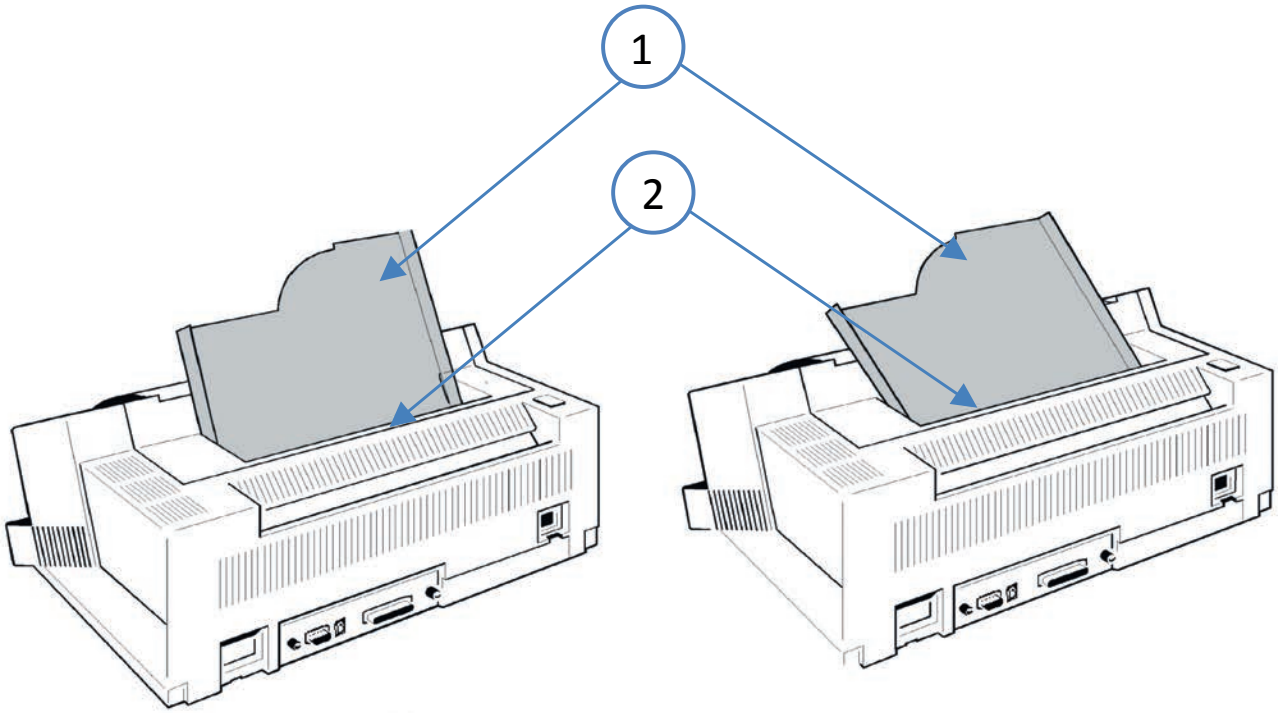

2.13 Selection of Operator Panel Language

The printer control panel and LCD display menu is used for the next steps. It is possible to change the language in the printer menu from English to French or German. The following example shows how to change from English to German:

Attention: The Menu is than displayed in german language. May be for you not more readable

1.	Power on printer			
2.		LOCAL		
3.	MENU	MACRO SELECT		⇨
4.	[⇩] -- [⇧]	INSTALLATION		⇨
5.	[⇨]	⇦	INTERFACE	⇨
6.	[⇩] -- [⇧]	⇦	LANGUAGE	⇨
7.	[⇨]	⇦	ENGLISH	★
8.	[⇩]	⇦	DEUTSCH	⇨
9.	[⇨]	⇦	DEUTSCH	★
10.	[⇦]	⇦	SPRACHE	⇨
11.	[⇦]	⇦	INSTALLATION	⇨
12.	[⇩]	⇦	MENUE SICHERN	⇨
13.	[⇨]		SICHERT (Azeige blinkt kurz)	★
14.	MENUE SICHERT			
15.			BEREIT 1 ELQ	

2.14 Print Menu

The current status of the printer configuration can be printed out via the menu item „PRINT MENU“ by following steps:

1.	Power on printer			
2.		LOCAL 1ELQ		
3.		MACRO SELECT		⇨
4.	[⇩] -- [⇧]	PRINT MENU		⇨
5.	[⇨]	⇦	PRINT MENU	⇨
6.	[⇨]	⇦	PRINT MENU	★
7.			PRINT MENU ★	
8.	Menu will printed			
9.	[⇦]	⇦	PRINT MENU	
10.	STOP			
11.			ONLINE 1 ELQ	

EXAMPLE OF PRINT MENU

MENU PRINTOUT	PM 00-013665-0	VERSION	8017556
INTERFACE		Adjustment	
BUFFER	8 KBYTE	AGC POSITION	24
WORD LENGHT	8 BIT	PLATEN GAP	0
I/F TYPE	SHARED	PAPER-IN JUST.	0
BAUD RATE	9600 BIT/S	TEAROFF ADJ.	0 1/60
PARITY	EVEN	UNI-DIRECT.CMD	YES
PROTOCOL	DTR	TRAKT. FF-MODE	IGNORE FF
		BELL	NO
		MENU ACCESS	ALL FUNCTIONS

	CURRENT SETTINGS	MACRO 1*	MACRO 2	MACRO 3	MACRO 4
FONT	DATA	DATA	DATA	DATA	DATA
LETTER FONT QU	LQ	LQ	LQ	LQ	LQ
DATA FONT QUA.	STANDARD DRAFT	STANDARD DRAFT	STANDARD DRAFT	STANDARD DRAFT	STANDARD DRAFT
GRAFIK QUAL.	STANDARD	STANDARD	STANDARD	STANDARD	STANDARD
BARCODE QUAL.	NLQ	NLQ	NLQ	NLQ	NLQ
SUB/SUPER FONT	YES	YES	YES	YES	YES
PITCH	10 CPI	10 CPI	10 CPI	10 CPI	10 CPI
LINE	6 LPI	6 LPI	6 LPI	6 LPI	6 LPI
PAGE LENGTH	72 LINES	72 LINES	72 LINES	72 LINES 7	2 LINES
TRACT. L. V-POS	0	0	0	0	0
MANUAL V-POS	0	0	0	0	0
LEFT MARGIN	1 COLLUM	1 COLLUM	1 COLLUM	1 COLLUM	1 COLLUM
RIGHT MARGIN	136 COLLUM	136 COLLUM	136 COLLUM	136 COLLUM	136 COLLUM
TOP MARGIN	1 LINES	1 LINES	1 LINES	1 LINES	1 LINES
BOTTOM MARGIN	1 LINES	1 LINES	1 LINES	1 LINES	1 LINES
PERF. SKIP	YES	YES	YES	YES	YES
PAPER SOURCE	TRACTOR	TRACTOR	TRACTOR	TRACTOR	TRACTOR
EMULATION	EPSON LQ	EPSON LQ	IBM PROPR.	IBM PROPR: AGM	EPSON LQ
CHARACTER SET	EPSON EXT. GCT	EPSON EXT. GCT	IBM SET 2	IBM SET 2	EPSON EXT. GCT
	3: GERMANY	3: GERMANY	1: USA	1: USA	3: GERMANY
LINE MODE	LF=LF. CR=CR	LF=LF. CR=CR	LF=LF. CR=CR	LF=LF. CR=CR	LF=LF. CR=CR
$$-COMMANDS	NO	NO	NO	NO	NO
TEAR/OFF / CUT	NO	NO	NO	NO	NO

Note: An asterisk (*) after MACRO 1 indicates the actual macro.

All this standard settings of the firmware will be restored with the menu function RECALL FACTORY.

2.15 Test-Printout

There are three test prints in the printer.

PRINT TEST 1

Shows a pattern of all printable characters. Use this to check if the printer operates correctly.

PRINT TEST 12

Sroduces a standard letter (ECMA-132) which can be used for measuring the printer‘s throughput.

PRINT TEST 3

Lists all available fonts, contains the page count to identify the actual number of printed pages, and gives information on technical releases which are intended for service purposes.

1.	Power on printer			
2.		STOP 1ELQ		
3.		MACRO SELECT		⇨
4.	[⇩] -- [⇧]	INSTALLATION		⇨
5.	[⇨]	⇦	INTERFACE	⇨
6.	[⇩] -- [⇧]	⇦	SELF TEST	⇨
7.	[⇨]	⇦	PRINT TEST 1	★
7.			PRINT TEST 1 ★	
8.	Test is startet			
9.	will stop the test			
11.			LOCAL 1 ELQ	
12.			ONLINE 1 ELQ	

```
ABCDEFGHIJKLMNOPQRSTUVWXYZabcdefghijklmnopqrstuvwxyz0123456789!§
§ABCDEFGHIJKLMNOPQRSTUVWXYZabcdefghijklmnopqrstuvwxyz0123456789!
!§ABCDEFGHIJKLMNOPQRSTUVWXYZabcdefghijklmnopqrstuvwxyz0123456789
9!§ABCDEFGHIJKLMNOPQRSTUVWXYZabcdefghijklmnopqrstuvwxyz012345678
89!§ABCDEFGHIJKLMNOPQRSTUVWXYZabcdefghijklmnopqrstuvwxyz01234567
789!§ABCDEFGHIJKLMNOPQRSTUVWXYZabcdefghijklmnopqrstuvwxyz0123456
6789!§ABCDEFGHIJKLMNOPQRSTUVWXYZabcdefghijklmnopqrstuvwxyz012345
56789!§ABCDEFGHIJKLMNOPQRSTUVWXYZabcdefghijklmnopqrstuvwxyz01234
456789!§ABCDEFGHIJKLMNOPQRSTUVWXYZabcdefghijklmnopqrstuvwxyz0123
3456789!§ABCDEFGHIJKLMNOPQRSTUVWXYZabcdefghijklmnopqrstuvwxyz012
23456789!§ABCDEFGHIJKLMNOPQRSTUVWXYZabcdefghijklmnopqrstuvwxyz01
123456789!§ABCDEFGHIJKLMNOPQRSTUVWXYZabcdefghijklmnopqrstuvwxyz0
0123456789!§ABCDEFGHIJKLMNOPQRSTUVWXYZabcdefghijklmnopqrstuvwxyz
z0123456789!§ABCDEFGHIJKLMNOPQRSTUVWXYZabcdefghijklmnopqrstuvwxy
yz0123456789!§ABCDEFGHIJKLMNOPQRSTUVWXYZabcdefghijklmnopqrstuvwx
xyz0123456789!§ABCDEFGHIJKLMNOPQRSTUVWXYZabcdefghijklmnopqrstuvw
wxyz0123456789!§ABCDEFGHIJKLMNOPQRSTUVWXYZabcdefghijklmnopqrstuv
vwxyz0123456789!§ABCDEFGHIJKLMNOPQRSTUVWXYZabcdefghijklmnopqrstu
uvwxyz0123456789!§ABCDEFGHIJKLMNOPQRSTUVWXYZabcdefghijklmnopqrst
tuvwxyz0123456789!§ABCDEFGHIJKLMNOPQRSTUVWXYZabcdefghijklmnopqrs
stuvwxyz0123456789!§ABCDEFGHIJKLMNOPQRSTUVWXYZabcdefghijklmnopqr
rstuvwxyz0123456789!§ABCDEFGHIJKLMNOPQRSTUVWXYZabcdefghijklmnopq
qrstuvwxyz0123456789!§ABCDEFGHIJKLMNOPQRSTUVWXYZabcdefghijklmnop
pqrstuvwxyz0123456789!§ABCDEFGHIJKLMNOPQRSTUVWXYZabcdefghijklmno
opqrstuvwxyz0123456789!§ABCDEFGHIJKLMNOPQRSTUVWXYZabcdefghijklmn
nopqrstuvwxyz0123456789!§ABCDEFGHIJKLMNOPQRSTUVWXYZabcdefghijklm
mnopqrstuvwxyz0123456789!§ABCDEFGHIJKLMNOPQRSTUVWXYZabcdefghijkl
lmnopqrstuvwxyz0123456789!§ABCDEFGHIJKLMNOPQRSTUVWXYZabcdefghijk
klmnopqrstuvwxyz0123456789!§ABCDEFGHIJKLMNOPQRSTUVWXYZabcdefghij
jklmnopqrstuvwxyz0123456789!§ABCDEFGHIJKLMNOPQRSTUVWXYZabcdefghi
ijklmnopqrstuvwxyz0123456789!§ABCDEFGHIJKLMNOPQRSTUVWXYZabcdefgh
hijklmnopqrstuvwxyz0123456789!§ABCDEFGHIJKLMNOPQRSTUVWXYZabcdefg
ghijklmnopqrstuvwxyz0123456789!§ABCDEFGHIJKLMNOPQRSTUVWXYZabcdef
fghijklmnopqrstuvwxyz0123456789!§ABCDEFGHIJKLMNOPQRSTUVWXYZabcde
efghijklmnopqrstuvwxyz0123456789!§ABCDEFGHIJKLMNOPQRSTUVWXYZabcd
defghijklmnopqrstuvwxyz0123456789!§ABCDEFGHIJKLMNOPQRSTUVWXYZabc
cdefghijklmnopqrstuvwxyz0123456789!§ABCDEFGHIJKLMNOPQRSTUVWXYZab
bcdefghijklmnopqrstuvwxyz0123456789!§ABCDEFGHIJKLMNOPQRSTUVWXYZa
cdefghijklmnopqrstuvwxyz0123456789!§ABCDEFGHIJKLMNOPQRSTUVWXYZab
defghijklmnopqrstuvwxyz0123456789!§ABCDEFGHIJKLMNOPQRSTUVWXYZabc
efghijklmnopqrstuvwxyz0123456789!§ABCDEFGHIJKLMNOPQRSTUVWXYZabcd
fghijklmnopqrstuvwxyz0123456789!§ABCDEFGHIJKLMNOPQRSTUVWXYZabcde
ghijklmnopqrstuvwxyz0123456789!§ABCDEFGHIJKLMNOPQRSTUVWXYZabcdef
hijklmnopqrstuvwxyz0123456789!§ABCDEFGHIJKLMNOPQRSTUVWXYZabcdefg
ijklmnopqrstuvwxyz0123456789!§ABCDEFGHIJKLMNOPQRSTUVWXYZabcdefgh
```

etc.....

The tests 2 and 3 are activated via the corresponding menu items in same way.

```
 Eilzustellung

Norddeutsche Farbwerke KG Herrn Dr. Grauert
Große Elbstraße 64

2000 Hamburg 4
Org. III 5/37          H-A    4 34    22.04.75
17.04.75               Volkmann

Vordruckgestaltung für den allgemeinen Schrift-
verkehr, für das Bestell- und Rechnungswesen    E i l t
Sehr geehrter Herr Dr. Grauert,
Sie können das Schreiben der Briefe, Bestellungen,
Rechnungen usw. sowie das Bearbeiten des Schriftguts
rationalisieren, wenn die Vordrucke Ihres Unternehmens
den folgenden Normen entsprechen:

    DIN 676 Geschäftsbrief; Vordrucke A4 DIN 677 -;
    Vordruck A5
    DIN 679 Geschäftspostkarte; Vordrucke A6

    DIN 4991 Vordrucke im Lieferantenverkehr; Rechnung
    DIN 4992 -; Bestellung (Auftrag)
    DIN 4993 -; Bestellungsannahme (Auftragsbestätigung)
    DIN 4994 -; Lieferschein/Lieferanzeige
    DIN 4998 Entwurfsblätter für Vordrucke

Diese Normen enthalten alle Einzelheiten für den
sinnvollen und zweckmäßigen Aufdruck. Wenn dazu bei
der Beschriftung genormter Vordrucke DIN 5008 ‚Regel
für Maschinenschreiben' beachtet wird, entstehen
übersichtliche und werbewirksame Schriftstücke.

Die beigefügten 6 Mustervordrucke zeigen, dass das
Beachten der Normen die künstlerische und werbewirksame
Gestaltung der Vor- drucke nicht ausschließt.

Da wir uns auf die Herstellung genormter Vordrucke
spezialisiert haben, können wir besonders billig
liefern. Eine Probestellung wird Sie und Ihre
Geschäftsfreunde von den Vorteilen überzeugen.

Mit bester Empfehlung NORAG
Druckerei und Verlagshaus KG

Herrmann Anlagen
6 Mustervordrucke
```

Note: will stop printing back to online state with key and .

Example Print Test 3

CONFIGURATION

FW	20815776	F-D	0.2	F-X	0.3	PM	00-013665-0
NFQ	1500	DSF	100	NLSF	100	LSF	100
GSF	80	NFT	270	TNA1	230	TNA2	260
TNA3	260	CAC	2.60	NDLC	2.2	PGC	46
PGCNT	143299	SBP	36				

C031 ISO 8859/1	CO32 ISO 8859/15	CO34 ISO 8859/5
CO32 ISO 8859/9	C061 IBM SET 1	C062 IBM SET 2
C063 IBM CODE PAGE	C071 EPSON EXT. GCT	C100 CODE PAGE EE
C101 CODE PAGE EE2	C912 GREEK CHR. SET	C069 ALL ICT TABLE
C091 BARCODE		

DATA		ROMAN	NLQ	ROMAN	LQ
SANS SERIF	NLQ	SANS SERIF	LQ	COURIER	NLQ
COURIER	LQ	PRESTIGE	NLQ	PRESTIGE	LQ
SCRIPT	NLQ	SCRIPT	LQ	OCR B	LQ
OCR A	LQ	ORATOR-C	NLQ	ORATOR-C	LQ
ORATOR	NLQ	ORATOR	LQ	DATA LARGE	

CHARACTER SET : EPSON EXT. GCT 1: U.S.A.

PRINTHEAD NEEDLE

1 2 3 4 5 6 7 8 9 10 11 12 13 14 15 16 17 18 19 20 21 22 23 24

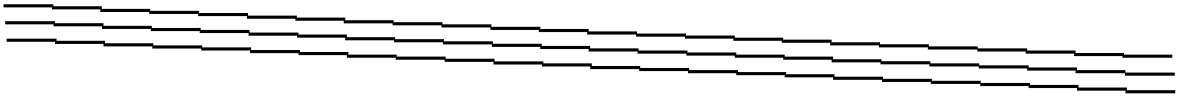

DATA DRAFT

$!"#$%&'()+,-./01234567890:;<=>?@ABCDEF.....

etc.

Note: FW- shows the Firmware Revision

2.16 Connection to a Computer

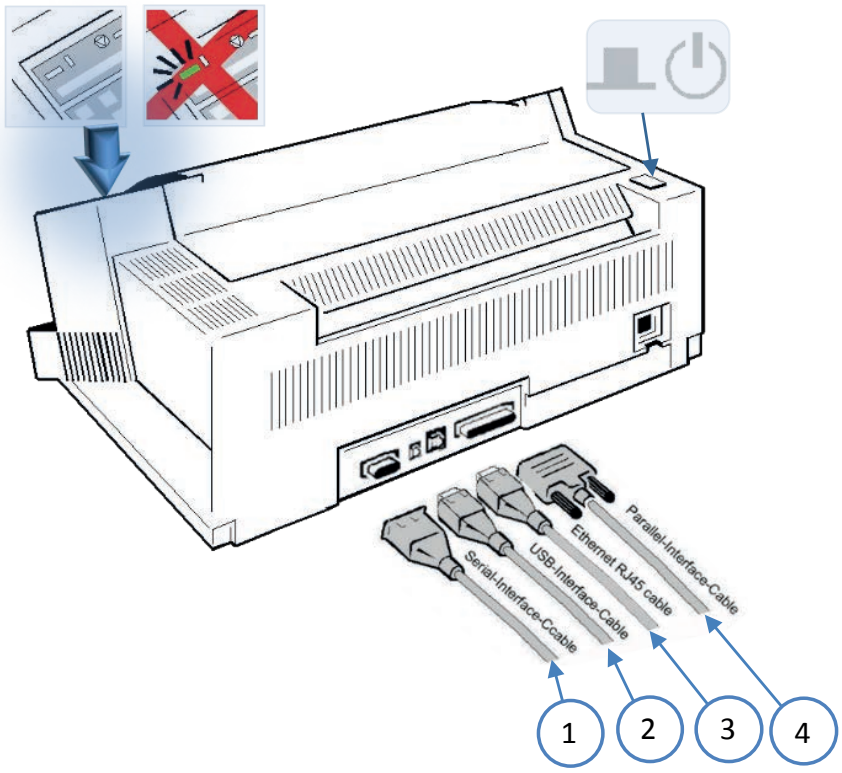

USB / Ethernet / Parallele / serielle Schnittstelle (Ethernet is an option provide by differnet PM)

Parallel, Serial, or USB Interface.
Switch the printer and computer OFF.
Connect the interface cable coming from the computer to the printer‘s parallel (1), serial (2), or USB port (3).
The printer is set by default to SHARED (PARALLEL/RS232) interface with the following parameters for serial port:

8 Kbyte buffer
8 bit
9600 baud
Parity ignore
DTR protocol.

SHARED means that, after Power-ON, all interfaces the USB,serial and the parallel interfaces are available for data transfer. The port to which data is sent becomes active automatically.
If the parallel, serial, or USB parameters need to be changed, see Appendix A Configure the Printer and Appendix B Interface Description.
If the parameters for the parallel or serial interface have to be changed, the information can be found in chapter 3 Configuring the printer and in the appendix A Interface Description. All other adjustments can be found in the interface description on the supplied product CD.

2.17 Printer driver

Introduction

This part of the documentation describes the features of the printer driver for the models PP803, but it is likely the same for PP 404 and PP 407.
The printer driver is available for Microsoft Windows NT2000,WIN XP Vista WIN7, WIN8, WIN10,SERVER 2003 and 2008. It allows the PP 80X variants from all Windows applications to print in graphics mode both as text. Here, all printer features such as the video resolution, paper management, printer fonts, macro switch, etc. provided by the driver. It includes the models PP 80X in the languages English and German.
The printer driver is installed under Control Panel -> Printers Microsoft Windows. A detailed description can be found in the respective user manual for Windows.

The driver is delievered with the product CD by the printer or can be download on PSi WEB-Page
https://psi-matrix.eu/en/printer-driver/

General: The following list describes the features supported by the printer driver. The base is the driver, the Epson LQ emulation and the ISO 8859-15 character table. For additional features, such as the selection of fonts, shaft selection, cutting instructions, page lengths are used PSi own commands. The printer driver is therefore not to use original EPSON printers or compatible printers.

2.17.1 Driver installation

- Open Control Panel -> Hardware and Sound -> Devices and Printers

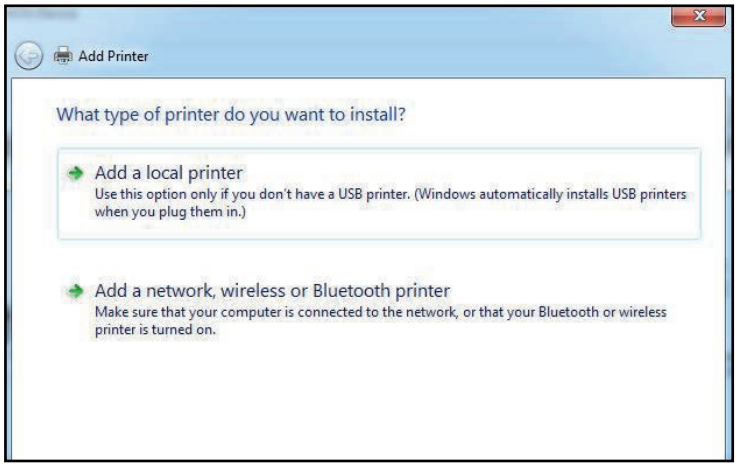

- Add a Printer

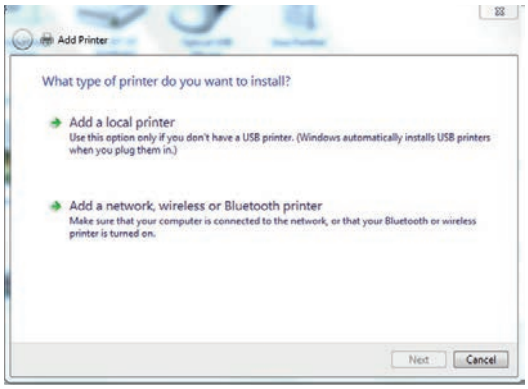

- Add a Local Printer -> next

- choose a printer port -> next

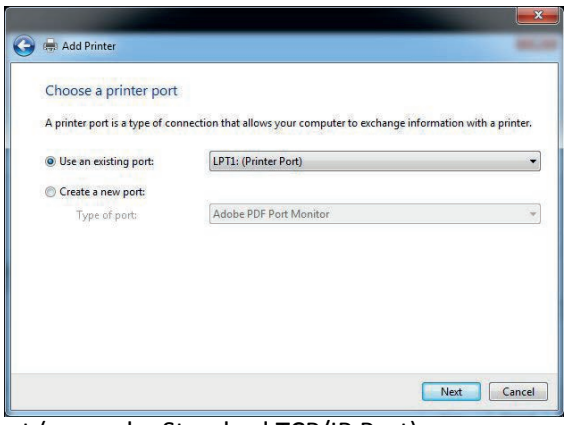

- create a new port (example: Standard TCP/IP Port)

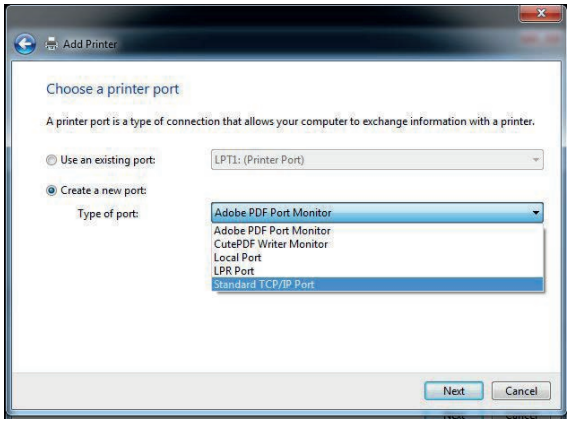

- put in Data for the port

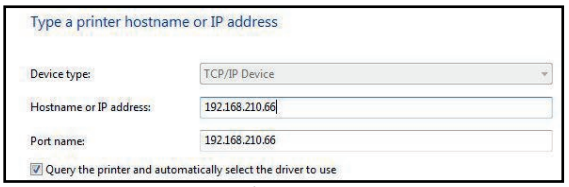

- -> next the system try to detect the TCP/IP port (printer must switched on)

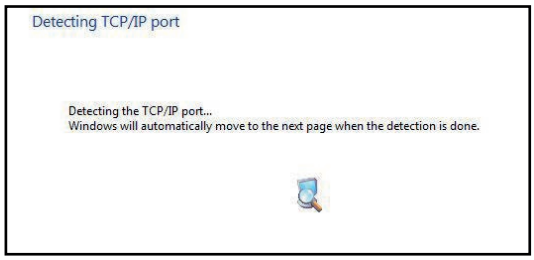

- choose Generic Network Card -> next

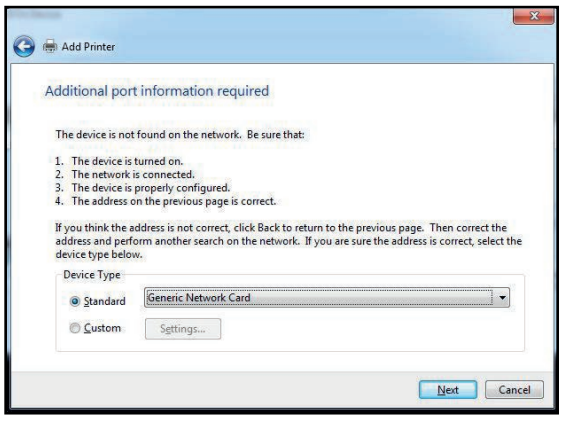

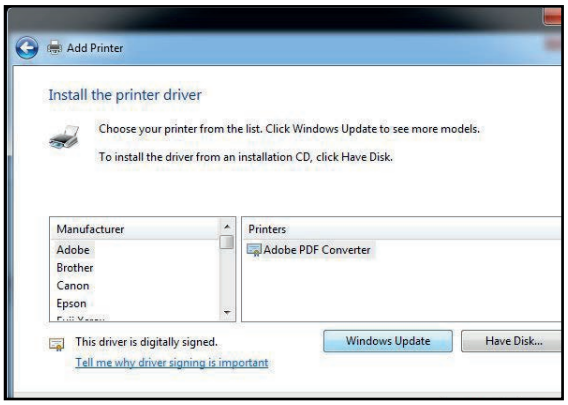

- choose the folder where the driver is placed by „Have a disk“

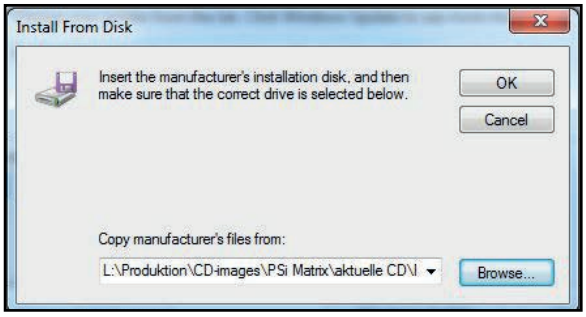

- Select the * .INF of the unpacked printer driver and open.

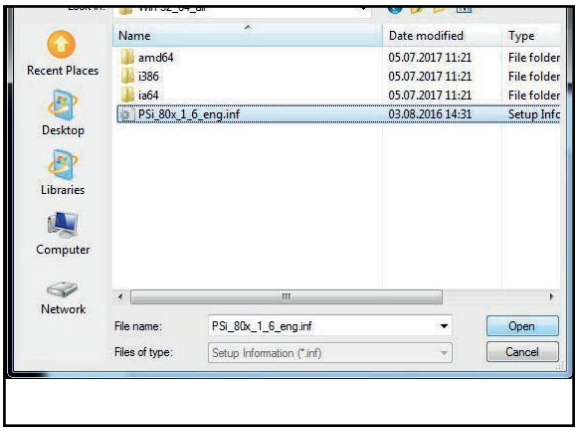

- open -> OK ->

- select the signed printer modell

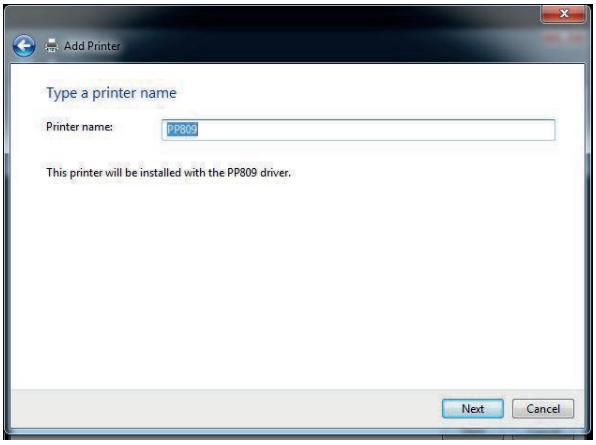

If PSi printer drivers are not yet installed on the PC or server, you will receive a request that you want to trust in the compilation of PSi. Put a tick on “Always trust PSi software” and install it.

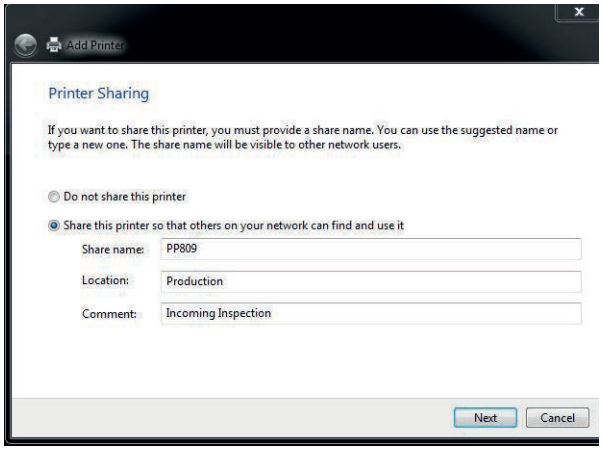

- Specify whether the printer should be used as the default printer. and finish. You can also print a test page. Prerequisite is that the printer port is configured correctly.
- Define printer name, location and/or give comment.

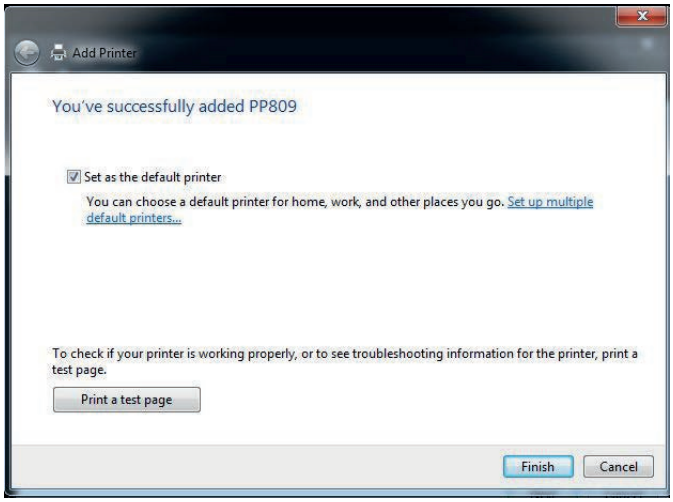

- Next ->

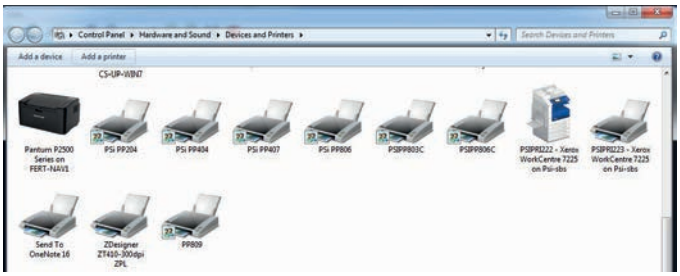

- The printer is now installed

3. Operation

Most of the printer‘s settings can be changed from the control panel or software commands from the host computer. Some functions can only be set via the control panel, eg. B. the locking of the menu access.

3.1 Control Panel

The control panel

- controls the set-up for communication with the host computer
- controls various parameter settings
- allows manual control of the paper handling
- gives information about t

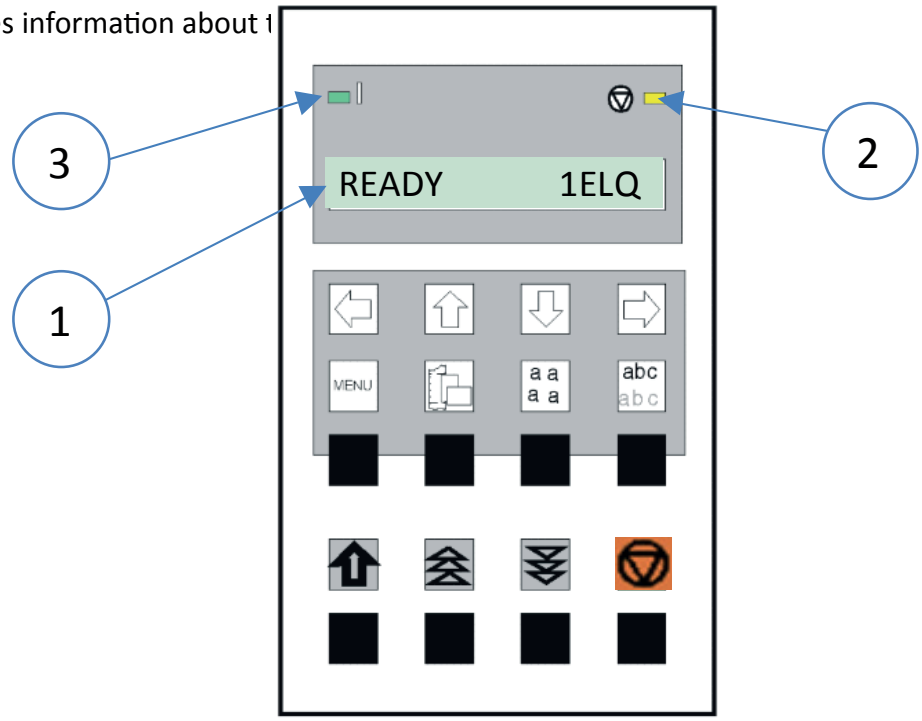

The 16-character Liquid Crystal Display (LCD) (1) indicates the current status of the printer. If an error occurs (e.g. COVER OPEN), the resulting error message overrides any other displayed message. When the error condition not leinger exists, the original status information appears on the display.

- The green Power ON indicator (3) is lit when the printer is supplied with power by setting the power ON/OFF switch to ON.
- The yellow STOP indicator (2) is lit when the printer is in the STOP mode. The printer enters the STOP mode either when (4) is pressed or when an error condition occurs such as NO PAPER, COVER OPEN, etc.

3.2 Change Macro

The following emulations are pre defined in the Macros

- EPSON LQ / ESC/P2 in Macro 1
- IBM Proprinter XL 24 in Macro 2
- IBM Proprinter XL 24 AGM in Macro 3
- EPSON LQ / ESC/P2 in Macro 4

The factory setting is the EPSON LQ/ESC/P2 emulation in Macro 1.

To change from eine emulation to another, follow the procedure below. The example shows the keys to press aleing with the display information for a change from EPSON LQ in macro 1 to IBM PROPR. in macro 2

= Macro 1

= Macro 2

= Macro 3

= Macro 4

Exsample: „Change from EPSON LQ / ESC/P2 in Macro 1 to IBM PROPR. in Macro 2“.

1.	Power on printer	
2.	READY 1ELQ	
3.		MACRO 2
4.	★	MAKCO 2
5.	READY 2IPP	

The information „READY 2 IPP“ indicates the selected macro and the emulation of this macro, for example:

Note: A number of parameter settings (Print Quality, Page Length, Margin, or Paper Source) is summarized in a „Macro“. It is possible to have a total of four macros, each with a different summary of parameter settings.

The green Power ON indicator (3) is lit when the printer is supplied with power by setting the p

3.3 Paper Source Selection

The TRACTOR is the default paper source. Using the control panel to change to the MANUAL is explained below:

The printer should be in the „Stop“ Mode (LOCAL)

= Paper Source

Example: Change from „TRACTOR LOWER“ to „MANUAL“.

1.	Power on printer	
2.	READY 1ELQ	
3.		LOCAL 1ELQ
4.		TRACTOR
5.	[⇩] -- [⇧]	MANUAL
6.	★	MANUAL
7.		Paperpath will change
8.	READY 1ELQ	

Note: If fanfold paper is already being printed while changing the paper source it will be depending on the printer type offered for tear off ore moved forward to the park position. In this case are four transport holes above the tractors are visible..

3.4 Function Keys

The function keys of the operator panel are grouped into two rows. The function of a key depends on the printer operation state. Following operation states are possible:

- READY or BUSY
- LOCAL

3.4.1 Function Keys in the printer operation state **READY** or **BUSY**

TASTEN SYMBOL		FUNCTION
	[FORM FEED]	VERT.POS.JUST. Quick adjustment to compensate for the top of the page.
	[MIKRO STEPS VORWARD]	Continuous JUST. [1]) Adjustment of an expression forward (+) on continuous paper
	[MIKRO STEPS REVERS]	Continuous JUST. [1]) Adjustment of an expression forward (-) on continuous paper
	[START/STOP]	START/STOP Key Switches between Ready and Offline mode
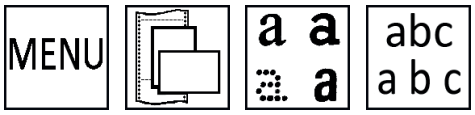		MACRO SELEKTION. Quick Marco change

[1]) Function only when paper is nserted. The settings are only valid as leing as the printer remains switched on and the paper does not pass over the paper sensor (new insert). This function is similar to a handwheel function and can not be saved.

Note:

These quick settings in the READY or BUSY modes described above can be selected with the menu item MENU ACCESS by QUICK ON. OFF (see Appendix A). In this case, after pressing eine of these buttons, the printer briefly displays the message LOCKED.

3.4.2 Function Keys in the printer operation state **OFFLINE**

TASTEN SYMBOL		FUNCTION
	[FORM FEED]	Insert or eject paper, Form Feed
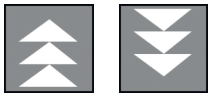	**[MICRO STEPS]**	Paper feed, paper return by micro steps
	[START/STOP]	START/STOP Key Switches between Ready and Offline mode
	[MENU]	MENU Key to enter the first level of the menu mode.
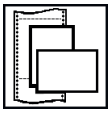	**[PAPER SOURCE]**	PAPER SOURCE Key for quick adjustment of the paper path.
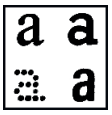	**[FONT]**	FONT Key zur schnellen Einstellung des Fonts (FONT).
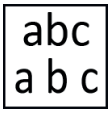	**[PITCH]**	PITCH Key for fast adjustment of the character spacing.

Note: After pressing eine of the keys 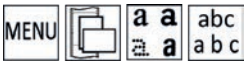 the Menu-Mode is activated Now the keys of the upper row can only be used to move the cursor (according to the arrows 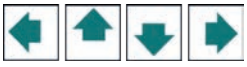 left, up, down and right).

3.4.3 Detailed description Function keys in ready mode

- Quick Setup (Only active if the MENU ACCESS function has not been locked by QUICK OFF - see Appendix A Configuring the Printer).

Meaning of Upper Keys on ONLINE (READY or BUSY) state

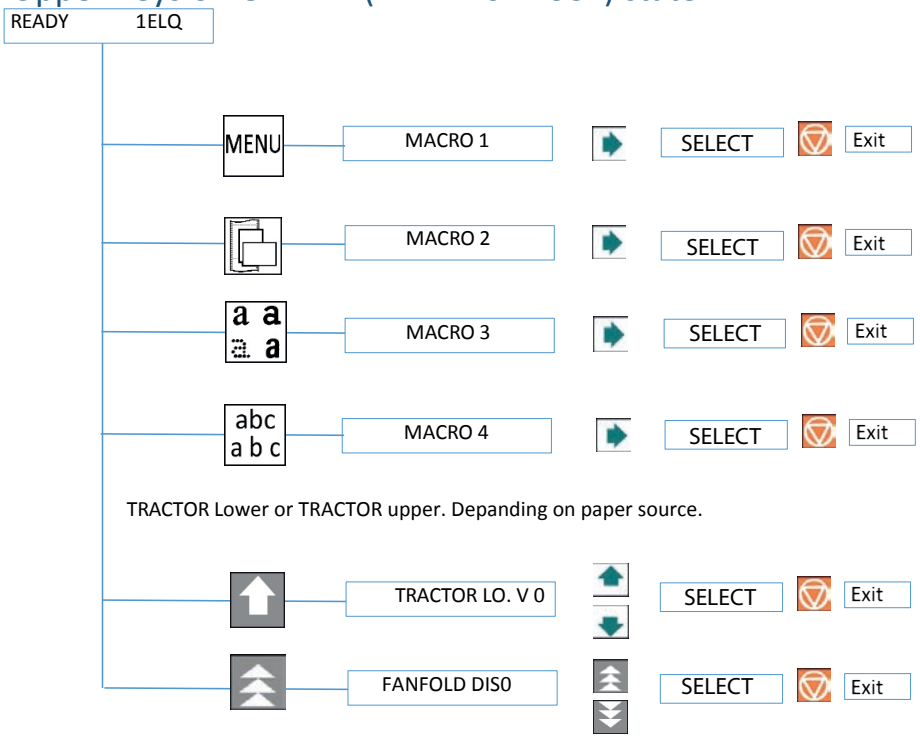

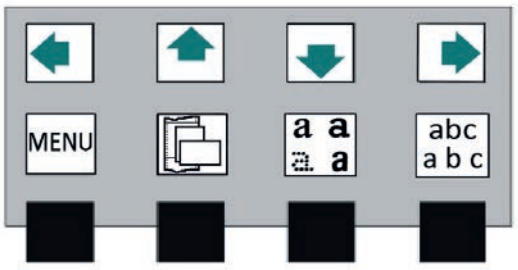

The buttons are used for quick SELECT MACRO. MENU Eine selects macro 1 to macro 4 from left to right. When the button pressed, the printer enters the STOP mode and MACRO 2 appears in the display. Press the button . The printer will now return to the READY or ACTIVE mode and, in this example, will return to READY 2 IPP. That means the macro 2 with the IBM ProPrinter emulation is active.

If eine of the buttons was accidentally MENU pressed, the procedure is canceled by pressing the button .

Note: All configuration settings (for example, form length or paper source) of the selected macro will take effect immediately reviously selected paper path.

If pressed key the message **Continuous JUST.** with condition **0 is displayed**, if a printjob is running it will stopped a went into the OFFLINE Mode.

By using or key the vertical position can be shifted.

	KEY	DISPLAY
1		READY 4 ELQ
2		FANFOLD DIS . 0
3		FANFOLD DIS . +1, +2, +3...
4		FANFOLD DIS . ....+3, +2,+ 1, 0
5		READY 4 ELQ

Note: The setting affects the line counter of the current printout and can not be saved for ew load paper. A power off and on or passing the again the paper sensor will reset this setting.

Use of this function.

Continuous paper with pre-printed forms (e.g., transfers) requires accurate line positioning. Assuming that a value should be printed in a box with a black border, then there may be the following errors:

- the printed value is on the upper edge - the form has to be shift up a bit.
- the printed value is on the bottom edge - the form has to be moved downwards. The execution of a line correction for a form that is in the parking position or on the first print line must be made by feeding on the second sheet. If the error is determined during the current printing process (ie not at the beginning of the form), the offset can be compensated by repositioning.

If the paper is in the parking position, it must first benserted by pressing . so the offset can be compensated by repositioning key.

Each key press increases the value, but there is still no form movement. If the button is held down, the first 20 increments are displayed in eine-step increments, and the remaining increments are displayed in increments of ten. Eine-step equals a 1/6 inch (0.42 mm) shift in the form and 1/6 inch (0.42 mm) at a ten-step increment. If the button is released and then pressed again, then the increase is again in eine-step. Exceeding the desired value for the shift can be deine with the key be reduced or reset in the same way.

The setting range depends on the set form length and the print position reached at the time of interruption. A maximum feed is possible from the current position to the page boundary plus a full

Meaning of Lower Keys on ONLINE (READY or BUSY) state

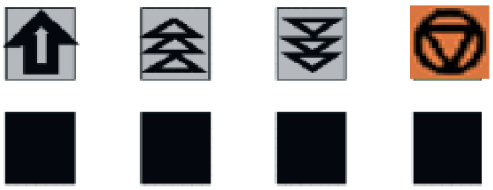

If an application with continuous forms requires special vertical positioning, there are two options for setting in the menu:

- Setting vertical positioning with the **VERT.POS.JUST.** Key
- Endless displacement with the **Continuous JUST**

This function allows you to jump directly to the menu mode to adjust the vertical positioning. The setting is changed in the current macro for the z. Currently selected paper path such as: TRACTOR VPOS:

This correction value positions the printout relative to the top of a pre-printed form. The setting has an effect after every form feed. The set values for the FIRST LINE and the LAST LINE are also taken into account. These values are part of the printer configuration and can be saved using the SAVE function.

The range covered by this setting is $-15/60$ to $+240/60$ nch ($1/60$ “ ≙ 0,42 mm), where „-“ (minus) means a shift up and „+“ (plus) a shift down (see **Configuration VERT.POS.JUST.**).

Note: If this function is activated during a running printout, the setting becomes effective from the following page. Recommended is the setting of VERT.POS.JUST. before the beginning of an expression.

- **Endless displacement with key** („function handwheel“) Continuous forms can be moved manually with this function if they are in the parking position or if there are already data in the buffer or if a form is partially printed. The continuous paper shift can only be activated in the READY or ACTIVE mode.

Note: The key **in READY or BUSY** Mode has not direct an effect! Only when the endless shift (+) by the key is initiated and paper is in the printer, can be moved to (-).

page, but no more than 999 steps (42 cm) in total. A pushback is only possible up to the upper edge of the current page.

If the required value is found, press key to change in **READY** or **BUSY** state.

There are the following possibilities:

- If the setting was changed before printing, the form will be moved by the set value before printing starts.
- If an offset has been determined and a correction has been made after a test print or in the current printout, the data still in the print buffer is printed out and only then is the form advanced by the set offset. All subsequent data will be printed on the new line position.

START/STOP-KEY

If pressed the printer changes to LOCAL- Mode. All printing and paper operations are stopped immediately. The indicator light STOP lights up and the display shows the message „LOCAL. All function keys are released. By pressing again the printer state changes to READY or BUSY.

- causes the STOP indicator to go out
- returns the printer to the ready state
- starts the printout or the self-test functions (see MENU MODE) or returns to the state READY
- leaves the MENU mode

Note: This button is not active when the top cover is open.

Meaning of Lower Keys in OFFLINE (LOCAL) state

Feed or eject button

- Insert continuous paper from the parking position to the printing position
- If inserted paper moves from the printing position to the tear-off position.
- If on TEAR OFF Position each press perform a Form Feed (1 page forward)

Note: Is the paper moved to „TEAR OFF“ paper will go back to the first line of print position if a new job is sending.

Micro step forward and Micro step reverse key

The paper first moves in the direction of the arrow in steps of $^{1}/_{90}$ inch (0,28 mm). If eine of these buttons is held down, the paper will continue to advance or retract.

- When feeding, continuous paper stops at the printing position when it comes out of the parking position, or stops at the tear-off position when it comes out of the printing position.
- When reversing, continuous paper stops at either the parking position, printing position or at the tear-off position.

Note: The printer automatically feeds the paper from the selected paper source. In case of a paper YESm,

the keys are used , and or paper transport.

3.5 MENU-Mode

All operator's selectable features are access able via the control panel and combined in the printer MENU

This feature provides:

- easy handling of configuration (interface, etc.)
- quick parameter changes during an application
- a SAVE function to make changes permanent (until purposely reset), facilitating changes in default settings.

Note: The function SAVE MENU is also in the first menu level. It allows you to commit the selected settings.

The menu has several levels:

- ***Level 1*** The first level contains the Main Functions.
- ***Level 2*** contains Sub-Functions
- ***Level 3*** allows to select/confirm values and contains fürther Sub-Functions
- ***Level 4*** allows to select/confirm values

3.5.1 Activate Menu

To activate the menu, perform the following steps:

- Press key The printer will then go into STOP mode and the message LOCAL will appear in the display
- Press key

the menu mode is activated. The keys in the top row can only be used to move the cursor (according to the arrows up, down, right and left).

Selection of Menu level:

- press or key; the keys have a wrap around function, i.e. after the last value the first value is repeated.

As display on the display there are the following possibilities:

This display appears only in the main function.Use the keys or for Menu entry

This display appears in the main function. To get to the next level, the key must be pressed.

Changing the values is possible by pressing the key orgo back by keys The following display appears:

Now we are in a subfunction. Movement in both directions is possible using the ▯ or ▯ keys.

In the last step, to select and activate values, you can select with After the selection, an asterisk ★ shows the current selection on the right:

Note: All cursor keys have a repeat function.

To exit the menu mode, press key or go back with key to main function

A number of VALUE settings are summarized as „macro“. A total of 4 macros are available, each with an individually defined set of values.

By factory default, the four macros re defined with following printer emulations:

Macro	**Emulation**
1	EPSON LQ 1060, LQ 2550 / ESC/P2
2	IBM ProPrinter XL 24
3	IBM ProPrinter XL 24 AGM
4	EPSON LQ 1060, LQ 2550 / ESC/P2

These predefined macros can be adapted according to the user wishes and the needs of the application. This results in the possibility that z. For example, for an application with the settings (e.g., form size) of macro 1 is used and another application needs the macro 2 because it is e.g. works with a different form size. Only eine other macro needs to be selected and activated. All other settings are deine with it.

3.5.2 MENU-SAVE

If the selection is to be permanent, i. after switching the printer off and on again, this is achieved with the SAVE function. The following steps are necessary for this:

	Taste	Anzeige
1		LOCAL 4 ELQ
2	MENU	MACRO SELECT ⇨
3	[⇩] -- [⇧]	SAVE ⇨
4	[⇨]	SAVING NOW (Display short blinks)
5		SAVE ⇨
6		LOCAL 4 ELQ

Note: The overview of the current settings and the four macros can be printed out with the function PRINT OUT.

4. Printer Configuration

4.1 How to Configurate“

This chapter describes how to use the control panel and the menu settings to set or configure the printer so that the printer and the computer can communicate with each other easily.

For the printer to communicate with the system, the computer‘s operating system and printer must have the same communication settings or features.

- The most important values for serial Interface are:
- Protocol,
- Baud rate,
- Characters Length,
- Interface (RS323, RS422)
- Parity.

It is also possible that some printer settings may need to be changed depending on the hardware and the application - eg. For example:

- Paper source
- Text or Graphic Mode.

The menu mode allows access to the configuration memory. All functions and parameters of the printer as well as the settings selected for the operation of the printer and any changes are stored in the memory.

The default configuration can be printed out with the function PRINT OUT. here the key sequence that must be pressed on the control panel to get the printout.

1.	Power on printer			
2.		LOCAL 1ELQ		
3.		SELECT MACRO		⇨
4.	[⇩] -- [⇧]	PRINT OUT		⇨
5.	[⇨]	⇦	PRINT OUT	⇨
6.	[⇨]	⇦	PRINT OUT	★
7.			PRINT OUT ★	
8.	PRINT OUT started			
9.	[⇦]	⇦	PRINT OUT	
10.	STOP			
11.		READY 1 ELQ		

The printout on the previously selected paper path.

.

4.2 Explanation of the „PRINT OUT“

MENU PRINTOUT	PM 00-013665-0	VERSION	8017556
INTERFACE		Adjustment	
BUFFER	8 KBYTE	AGC POSITION	24
WORD LENGHT	8 BIT	PLATEN GAP	0
I/F TYPE	SHARED	PAPER-IN JUST.	0
BAUD RATE	9600 BIT/S	TEAROFF ADJ.	0 1/60
PARITY	EVEN	UNI-DIRECT.CMD	YES
PROTOCOL	DTR	TRAKT. FF-MODE	IGNORE FF
		BELL	NO
		MENU ACCESS	ALL FUNCTIONS

	CURRENT SETTINGS	MACRO 1*	MACRO 2	MACRO 3	MACRO 4
FONT	DATA	DATA	DATA	DATA	DATA
LETTER FONT QU	LQ	LQ	LQ	LQ	LQ
DATA FONT QUA.	STANDARD DRAFT	STANDARD DRAFT	STANDARD DRAFT	STANDARD DRAFT	STANDARD DRAFT
GRAFIK QUAL.	STANDARD	STANDARD	STANDARD	STANDARD	STANDARD
BARCODE QUAL.	NLQ	NLQ	NLQ	NLQ	NLQ
SUB/SUPER FONT	YES	YES	YES	YES	YES
PITCH	10 CPI	10 CPI	10 CPI	10 CPI	10 CPI
LINE	6 LPI	6 LPI	6 LPI	6 LPI	6 LPI
PAGE LENGTH	72 LINES	72 LINES	72 LINES	72 LINES 7	2 LINES
TRACT. L. V-POS	0	0	0	0	0
MANUAL V-POS	0	0	0	0	0
LEFT MARGIN	1 COLLUM	1 COLLUM	1 COLLUM	1 COLLUM	1 COLLUM
RIGHT MARGIN	136 COLLUM	136 COLLUM	136 COLLUM	136 COLLUM	136 COLLUM
TOP MARGIN	1 LINES	1 LINES	1 LINES	1 LINES	1 LINES
BOTTOM MARGIN	1 LINES	1 LINES	1 LINES	1 LINES	1 LINES
PERF. SKIP	YES	YES	YES	YES	YES
PAPER SOURCE	TRACTOR	TRACTOR	TRACTOR	TRACTOR	TRACTOR
EMULATION	EPSON LQ	EPSON LQ	IBM PROPR.	IBM PROPR: AGM	EPSON LQ
CHARACTER SET	EPSON EXT. GCT 3: GERMANY	EPSON EXT. GCT 3: GERMANY	IBM SET 2 1: USA	IBM SET 2 1: USA	EPSON EXT. GCT 3: GERMANY
LINE MODE	LF=LF. CR=CR	LF=LF. CR=CR	LF=LF. CR=CR	LF=LF. CR=CR	LF=LF. CR=CR
$$-COMMANDS	NO	NO	NO	NO	NO
TEAR/OFF / CUT	NO	NO	NO	NO	NO

In the header, behind the text: VERSION, you will find the number of the release status of the printer firmware. Most of the MACRO settings are listed. Since MACRO 1 the Currently valid setting

4.3 Interface and Adjustment

INTERFACE - Here are the default settings for transferring data from the computer to the printer.

They are the following settings:

- Buffer 64 KByte
- I/F Interface Type SHARED
- Word Lenght 8 bits
- Baud rate 9600 bps
- Parity Even
- Protocol DTR
- DSR / CTS mode Ignore. DSR + CTS

Note: Automatic transmission of the protocol is not supported.

Adjustment- Here are the following default settings

- AGC POSITION 24 -> indicates the position on which the paper thickness is measured in the line.
- PLATEN GAP 0 -> Correction value for the head gap
- PAPER-IN ADJ. 0 -> Correction value for Paper-In-Sensor
- TEAR OFF AD L/U. 0 1/60 -> Correction value TEAR OFF / CUT
- UNI-DIREKT.CMD YES-> Unidirectional Command
- TRAKT. FF-MODE FF IGNORIEREN -> es wird nur 1 FF ausgefUhrt
- HUPE NO -> NO akustischer Ton bei Transpoprt auf Tear-Of Kkante
- MENU ACCESS FULL ACCESS -> MenU uNOgerschränkt benutzbar

Correction value for the head distance If new settings are not saved, they are lost after switching off and on.
If some changes are made within the current macro by the application, these changed settings appear under the heading CURRENT SETTINGS.

4.4 Short description of the menu items of the macro and tests).

The following tables show the menu and submenu items as well as the associated parameters with the possible settings. An asterisk (*) indicates the default (factory default).

4.4.1 SELFTEST

Selectable via

MENU / **SELECT MACRO** ⇩ **PRINT OUT** ⇨

SELECTION	FUNCTION
PRINT OUT	Printout of the settings, the release status and the page counter

4.4.2 MACRO-SELECTION

Selectable via

MENU / **SELECT MACRO** ⇨

SELECTION	FUNCTION	DEFAULT
MACRO 1	User configuration 1	*
MACRO 2	User configuration 2	
MACRO 3	User configuration 3	
MACRO 4	User configuration 4	

4.4.3 FONT

Selectable via

MENU / **SELECT MACRO** ⇩ **CHANGE MACRO** ⇨ **FONT** ⇨

SELECTION	PARAMETER / VALUE	DEFAULT
FONT	DATA Draft ROMAN LQ / NLQ SANS SERIF LQ / NLQ COURIER LQ / NLQ PRESTIGE LQ / NLQ SCRIPT LQ / NLQ OCR B LQ OCR A LQ ORATOR-C LQ / NLQ	*

4.4.4 PRINT QUALITY

Selectable via

MENU/ **SELECT MACRO** ⇩ **CHANGE MACRO** ⇨ **FONT** ⇩ **PRINT QUALITY** ⇨

SELECTION	PARAMETER / VALUE	DEFAULT
FONT QUAL.	LQ NLQ (DRAFT is automatically assigned to the font DATA)	*
GRAPHIC QUAL.	STANDARD WIN.LQ 180 DPI WIN.NLQ 90 DPI WI.DRAFT 60 DPI	*
BARCODE QUAL.	LQ NLQ	*

4.4.5 **SUB/SUPER FONT**

Selectable via

MENU/ **SELECT MACRO** ⇩ **CHANGE MACRO** ⇨ **FONT**⇩**SUB/SUPER FONT** ⇨

SELECTION	PARAMETER / VALUE	DEFAULT
SUB/SUPERSCRIPT	YES NO	*

4.4.6 LINE

Selectable via

MENU/ **SELECT MACRO** ⇩ **CHANGE MACRO** ⇨ **FONT** ⇩ **PITCH** ⇨

SELECTION	PARAMETER / VALUE	DEFAULT
PITCH	10 CPI 12 CPI 15 CPI 17 CPI 18 CPI 20 CPI	*

4.4.7 PITCH

Selectable via

MENU/ **SELECT MACRO** ⇩ **CHANGE MACRO** ⇨ **FONT** ⇩ **LINE** ⇨

SELECTION	PARAMETER / VALUE	DEFAULT
LINE	2 LINES 3 LINES 4 LINES 6 LINES 8 LINES 12 LINES	*

4.4.8 PAGE LENGHT

Selectable via

MENU/ **SELECT MACRO** ⇩ **CHANGE MACRO** ⇨ **SELECT MACRO** ⇩ PAGE LENGHT ⇨

SELECTION	PARAMETER / VALUE	DEFAULT
PAGE LENGHT	72 LINES (Range: 1 to 144 lines)	*

4.4.9 Justify first print position

Selectable via

MENU/ **SELECT MACRO** ⇩ **CHANGE MACRO** ⇨ **FONT** ⇩ **TRACTOR V-POS** ⇨

SELECTION	PARAMETER / VALUE	DEFAULT
TRACT.OR. V-POS	TRACTOR V. 0.0 -15.0 to 240 in steps of 1/60 inch	V 0.0 *

4.4.10 Adjusting the first print position in the line (left margin)

Selectable via

MENU/ **SELECT MACRO** ⇩ **CHANGE MACRO** ⇨ **FONT** ⇩ **LEFT MARGIN**⇨

SELECTION	PARAMETER / VALUE	DEFAULT
LEFT MARGIN	1. POSITION (Range 1 to 15; Steps $^{1}/_{10}$ Inch)	*

4.4.11 Adjust the last print position in the line (right margin)

Selectable via

MENU/ **SELECT MACRO** ⇩ **CHANGE MACRO** ⇨ **FONT** ⇩ **RIGHT MARGIN** ⇨

SELECTION	PARAMETER / VALUE	DEFAULT
RIGHT MARGIN	136. POSITION 132. POSITION 80. POSITION	*

4.4.12 Adjust the first line (top margin)

Selectable via

MENU/ **SELECT MACRO** ⇩ **CHANGE MACRO** ⇨ **FONT** ⇩ **TOP MARGIN** ⇨

SELECTION	PARAMETER / VALUE	DEFAULT
TOP MARGIN	1. POSITION (Range 1 to 16; lines $^{1}/_{6}$ Inch)	*

4.4.13 Adjust the last line (BOTTOM MARGIN)

Selectable via

MENU/ **SELECT MACRO** ⇩ **CHANGE MACRO** ⇨ **FONT** ⇩ **BOTTOM MARGIN** ⇨

SELECTION	PARAMETER / VALUE	DEFAULT
BOTTOM MARGIN	1. LINES (Range from 1 to 8 Lines $^{1}/_{6}$ Inch)	*

4.4.14 Perforations skip

Selectable via

MENU/ **SELECT MACRO** ⇩ **CHANGE MACRO** ⇨ **FONT** ⇩ **PERF. SPRUNG** ⇨

SELECTION	PARAMETER / VALUE	DEFAULT
PERF. SPRUNG	YES NO NO / OVERLAPPING YES / OVERLAPPING	*

4.4.15 Paper Source

Selectable via

MENU/ **SELECT MACRO** ⇩ **CHANGE MACRO** ⇨ **FONT** ⇩ **PAPER SOURCE** ⇨

SELECTION	FUNCTION	DEFAULT
PAPER SOURCE	• TRACTOR • MANUAL • BIN (1,2,3, 1/2, 1/2/3 if ASF is installed PP 405)	*

1) werden nur angezeigt, wenn die entsprechenden ASF Kassetten installiert sind

4.4.16 Paper Exit

Selectable via

MENU/ **SELECT MACRO** ⇩ **CHANGE MACRO** ⇨ **FONT** ⇩ **PAPER EXIT**⇨

SELECTION	FUNCTION	DEFAULT
PAPER EXIT	• REAR • STACKER (PP 405) • FRONT	*
STACKER CAP..	Set the capacity of the output stack to pages. When the appropriate value is reached, the printer stops (Range: 20 to 600, step = 20)	

4.4.17 Emulation

Selectable via

MENU/ **SELECT MACRO** ⇩ **CHANGE MACRO** ⇨ **FONT** ⇩ **EMULATION** ⇨

SELECTION	PARAMETER / VALUE	DEFAULT
EMULATION	• EPSON LQ • IBM PROPR. • IBM PROPR. AGM	Depending on the selected MACRO

4.4.18 CHARACTER SET

Selectable via

MENU/ **SELECT MACRO** ⇩ **CHANGE MACRO** ⇨ **FONT**⇩**CHARACTER SET** ⇨

SELECTION	CODEPAGES	DEFAULT
ISO 8859/1 ISO 8859/5 ISO 8859/9 ISO 8859/15	Western European / American Latin / Cyrillic Turkish Western European / American(€)	
IBM SET 1 / IBM SET 2	1: U.S.A. 2: FRANCE 3: GERMANY 4: U.K. 5: DENMARK 6: SWEDEN 7: ITALY 8: SPAIN 9: YESPAIN 10: NORWAY 11: DENMARK 2 12: SPAIN 2 13: LATIN AM. 14: TURKEY	*
IBM CODE PAGE	1: PAGE 437 2: PAGE 850 3: PAGE 860 4: PAGE 863 5: PAGE 865 6: PAGE 858 7: PAGE 857	*
EPSON EXT. GCT	1: U.S.A. 2: FRANCE 3: GERMANY 4: U.K. 5: DENMARK 6: SWEDEN 7: ITALY 8: SPAIN 9: YESPAIN 10: NORWAY 11: DENMARK 2 12: SPAIN 2 13: LATIN AM. 14: TURKEY 15: LEGAL	*

CODE PAGE EE	1: CP 437 GK 2: CP 851 GK 3: CP 928 GK 4: CP 855 CYRI 5: CP 866 6: CP 869 7: CP 852 8: KAMENICKY 9: ISO LATIN 2 10: MAZOVIA 11: CP 437 HUN 12: CP 852 SEE 13: CP 866 LAT 14: CP WIN LAT2	*
CODE PAGE EE2	1: CP 771 2: CP 773 3: CP 774 4: CP 775 5: BALTIC RIM 6: CP 1250 7: CP 1125	*

4.4.19 Line Mode

Selectable via

MENU/ **SELECT MACRO** ⇩ **CHANGE MACRO** ⇨ **FONT** ⇩ **LINE MODE** ⇨

SELECTION	PARAMETER / VALUE	DEFAULT
LINE MODE	LF = LF, CR = CR LF = LF + CR CR = LF+CR LF, CR = LF + CR	*

4.4.20 $$-Command

Selectable via

MENU/ **SELECT MACRO** ⇩ **CHANGE MACRO** ⇨ **FONT** ⇩ **$$-COMMAND** ⇨

SELECTION	PARAMETER / VALUE	DEFAULT
$$-COMMAND	NO YES	*

4.4.21 Tear off

Selectable via

MENU/ **SELECT MACRO** ⇩ **CHANGE MACRO** ⇨ **FONT** ⇩ **TEAR OFF** ⇨

SELECTION	PARAMETER / VALUE	DEFAULT
TEAR OFF	• NO • TEAR OFF 10 S.FF • TEAR OFF 10 S. • TEAR OFF 1 S. FF • TEAR OFF 1 S.	*

4.5 Quick description of the menu items Installation

The following tables show the menu and submenus as well as the associated parameters with the possible ON positions. ON star (*) indicates the default setting (factory setting).

4.5.1 Iterface Type (I/F)

Selectable via

MENU/ **SELECT MACRO** ⇩ **INSTALLATION** ⇨ **INTERFACE** ⇨ **I/F TYP** ⇨

SELECTION	PARAMETER / VALUE	DEFAULT
BUFFER	1 KBYTE 8 KBYTE 32 KBYTE 64 KBYTE 128 KBYTE 160 KBYTE	*
WORD LENGHT 1)	7 BIT 8 BIT	
I/F TYPE	SHARED PARALLEL SERIAL USB	*
BAUD-RATE [1])	1200 BIT / S 2400 BIT / S 4800 BIT / S 9600 BIT / S 19200 BIT / S	*
PARITY [1])	EVEN ODD NEine	*
PROTOCOL [1]) [2])	DTR XON / XOFF XON / XOFF + DTR	*
AUTO-STATUS	YES NO	
PRINTERSTATUS	YES NO	*

4.5.2 AGC Position

Selectable via

MENU/ **SELECT MACRO** ⇩ **INSTALLATION** ⇨ **Adjustment** ⇩ **AGC POSITION** ⇨

SELECTION	PARAMETER / VALUE	DEFAULT
AGC POSITION	POSITION 24 (Range 4 to 131)	*

4.5.3 PLATEN GAP

Selectable via

MENU/ **SELECT MACRO** ⇩ **INSTALLATION** ⇨ **Adjustment** ⇩ **PLATEN GAP** ⇨

SELECTION	PARAMETER / VALUE	DEFAULT
PLATEN GAP	**PLATEN GAP** 0 (Range -3 to +4)	*

4.5.4 AGC adjust

Selectable via

MENU/ **SELECT MACRO** ⇩ **INSTALLATION** ⇨ **Adjustment**⇩**AGC ADJUST**⇨

SELECTION	PARAMETER / VALUE	DEFAULT
AGC ADJUST	NO YES	*

4.5.5 Paper-In adjust

Selectable via

MENU/ **SELECT MACRO** ⇩ **INSTALLATION** ⇨ **Adjustment** ⇩ **PAPER-IN ADJ.** ⇨

SELECTION	PARAMETER / VALUE	DEFAULT
PAPER-IN ADJ	PAPER_IN ADJ 0 (Range.-3 to +4)	*

4.5.6 Adjust Tear off position (tractor)

Selectable via

MENU/ **SELECT MACRO** ⇩ **INSTALLATION** ⇨ **INTERFACE** ⇩ **TEAR OFF ADJ (LO/UP)** ⇨

SELECTION	PARAMETER / VALUE	DEFAULT
TEAR OFF ADJ LO	**TEAR OFF ADJ** 0 1/60 1 to +360; in Steps of 1/60 Inch	0 1/60 *

4.5.7 Undirectional Command

Selectable via

MENU/ **SELECT MACRO** ⇩ **INSTALLATION** ⇨ **Adjustment** ⇩ **UNI.DIREKT.BEF** ⇨

SELECTION	PARAMETER / VALUE	DEFAULT
UNI.DIREKT.BEF	YES NO	*

4.5.8 TRACTOR Form Feed Mode

Selectable via

MENU/ **SELECT MACRO** ⇩ **INSTALLATION** ⇨ **Adjustment** ⇩ **TRACT. FF-MOD** ⇨

SELECTION	PARAMETER / VALUE	DEFAULT
TRACT. FF-MODE	IGNORE EXECUTE	*

4.5.9 LANGUAGE (Menu)

Selectable via

MENU/ **SELECT MACRO** ⇩ **INSTALLATION** ⇨ **Adjustment** ⇩ **LANGUAGE** ⇨

SELECTION	PARAMETER / VALUE	DEFAULT
LANGUAGE	ENGLISH GERMAN FRANCAIS TURKSE	*

4.5.10 Bell

Selectable via

MENU/ **SELECT MACRO** ⇩ **INSTALLATION** ⇨ **INTERFACE** ⇩ **BELL** ⇨

SELECTION	PARAMETER / VALUE	DEFAULT
HUPE	NO YES	*

4.5.11 Restore setup

Selectable via

MENU/ **SELECT MACRO** ⇩ **INSTALLATION** ⇨ **INTERFACE** ⇩ **RESTORE SETUP** ⇨

SELECTION	PARAMETER / VALUE	EXECUTE
RESTORE SETUP	Lädt die gespeicherten MenUEinstellungen	* execute /

4.5.12 Recall factory settings

Selectable via

MENU/ **SELECT MACRO** ⇩ **INSTALLATION** ⇨ **INTERFACE** ⇩ **RECALL FACTORY** ⇨

SELECTION	PARAMETER / VALUE	EXECUTE
RECALL FACTORY	Setzt den Drucker auf die FabrikEinstellung zurUck. (Default)	* execute /

4.5.13 Menu access

Selectable via

MENU/ **SELECT MACRO** ⇩ **INSTALLATION** ⇨ **INTERFACE** ⇩ **MENU ACCESS** ⇨

SELECTION	PARAMETER / VALUE	FUNCTION
MENU ACCESS	ALL FUNCTION. QUICK MENU ONLY Macros ONLY NO ACCESS	All menu unctions are available * Only access to the Quick keys Only access to the Mcro functions Access to the menu is not possible for the user.

Cancel the menu lock:

Power off printer by key press and simultaneously, and turn on the printer.

When the message MENU ACCESS is displayed, release the buttons.

In MENU ACCESS the FUNCTION ALL FUNCT. should be select by enter with key. The change must be saved.

4.5.14 SELF TEST

Selectable via

MENU/ **SELECT MACRO** ⇩ **INSTALLATION** ⇨ **INTERFACE** ⇩ **SELF TEST** ⇨

SELECTION	FUNCTION
TEST 1	Printout of all available fonts, current status of the page counter
TEST 2	Printout of the standardized letter according to ECMA-132
TEST 3	Print all printable characters (endless must be canceled)

4.5.15 HEX DUMP

Selectable via

MENU / **SELECT MACRO** ⇩ **INSTALLATION** ⇨ INTERFACE ⇩ **HEX DUMP** ⇨

SELECTION	FUNCTION
HEX DUMP	With this SETUP, the print file is printed out as a control character (HEC code). Used for data stream analysis.

4.5.16 FIRMWARE Version

Selectable via

MENU / **SELECT MACRO** ⇩ **INSTALLATION** ⇨ INTERFACE ⇩ **FIRMWARE VER** ⇨

SELECTION	FUNCTION
FIRMWARE VER	Displays the printer Firmware Version

4.5.17 Programm update

Selectable via

DRUCKERTEST ⇩ **INSTALLATION** ⇨ **INTERFACE** ⇩ **PROGRAM UPDATE** ⇨

SELECTION	PARAMETER / VALUE	EXECUTE
PROGRAM UPDATE	Loading the new firmware is only possible via the INTERFACE cable from the computer system. All menu settings are reset to the factory values!	* execute /

4.5.18 SAVE MENU

Selectable via

DRUCKERTEST ⇩ **INSTALLATION** ⇨ **INTERFACE** ⇩ **SAVE MENU** ⇨

SELECTION	PARAMETER / VALUE	EXECUTE
SAVE MENU	saved	* execute /

4.6 Description of the individual menu items

Main function
The following main functions are available:

- **SELF TEST**
  Four test printouts and the HEX-DUMP are available.
- **CHANGE MACRO**
  This menu option All functions and parameters for setting the macros.
  Detailed information can be found in chapter 4.4.2
- **INSTALLATION**
  The first subfunction - Interface - contains the parameters for the data transfer from the computer. The fürther sub-functions can be z. For example, basic settings such as the control panel language or locking the menu.
- **SAVE**
  Any changes within a macro can be written (saved) to the configuration memory of the printer with this function. After switching off and on again, the new values are now available. While executing this function, the message SAVING NOW flashes in the display.

4.6.1 SELF TEST

Under this point, four different printouts can be generated independently of any host computer.

PRINT OUT
Print the configuration (see previous section).

TEST 1
Printing of the versions, the page counter and the available fonts This test print also provides information on the technical state and thus serves service purposes.

TEST 2
Standard letter according to ECMA-132 for measuring printer performance in pages / hour.

TEST 3
Printing of letters, special characters and numbers.

HEX-DUMP
This feature allows you to analyze the data received from the printer.

- Control codes are not executed, instead all data is printed in hexadecimal format and then in ASCII format. Non-representable characters, such as CR, as ONzelner point (.) In the ASCII listing.
- It may happen that the data transfer to the printer is interrupted during hex-dump. In this case, the pressure of the data received after the pause is started on the next free line. ON irregular right edge is the result, but means no data loss.

4.6.2 CHANGE MACRO

Note: The parameters can be selected via the control panel or via a corresponding Set „Control Code Sequence“ by the application. The attitude about the „Control Code Sequence“ appears in the CURRENT SETTINGS column.

SELECT MACRO

- To select and activate one of the four defined macros. This allows the printer to be quickly and safely adjusted to the specifics of an application. Example: In application A under MACRO 1, 11 inches of paper are processed and in application B under MACRO 2, 3-inch transfer forms are printed. With the buttons 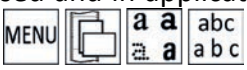

you immediately get into the menu mode and can make a quick selection.

PAPER SOURCE

The following paper sources are available:

- **TRACTOR LOWER** (continuous paper)
- **TRACTOR UPPER** (continuous paper)
- TRACTOR L/U automatically switches to the next paper path when the paper ends

Each paper source can be assigned a correction factor for the vertical or horizontal paper position.

Note: The exact paper specifications can be found in chapter Technical data.

PAPER EXIT

Tthe following settings are possible (only for PP 405):

- PATH and STACK CAPACITY
  Parameter für PATH:
  BATCH Standard for continuous paper
  STACKER for cutted single papers

Parameters for STACK CAPACITY.
possible SETTINGS:
„_“ Stands for no indication and is the factory setting; and can enhanced from 20 to 600 in increments of 20 pages.

VERT. POS.ADJ. (vertical offset)

- This function sets the vertical positioning in the current macro for the available paper paths Tractor [LOWER / UPPER].

Tthe following settings are possible

- Tract L V O: - 24,0 to 99,9 in steps of 1/6 Inch,
- Tract U V O: - 24,0 to 99,9 in steps of 1/6 Inch,

The negative correction value means a shift upwards. So the positive value shifts down.

Note: These settings take effect after the next form feed. Therefore, it makes sense that the paper is in the parking position before the print job.

PAGE LENGHT

- The form length is expressed in lines and can be set in a range of 5 to 132 lines. All form lengths are calculated on the basis of six lines per inch, even if the number of lines per inch is set to a different value via the control panel or via the application.

The following list shows the number of lines for most conventional paper sizes.

Page length in inches	Set number of lines	
• 3	18	
• 4	24	
• 4 1/6	25	
• 6	36	
• 8	48	
• 8 1/2	52	
• 11	66	
• A4 11 1/3	68	
• 11 2/3	70	
• 12	72	*

The Form Length setting is used as the basis for the tear-off mode and for the top and bottom margin settings.

Incorrect page size will therefore result in incorrect paper feed and possibly paper jam.

PRINT QUAL (Printquality)

DRAFT FONT QUAL.

Different print quality levels can be selected:

- High speed draft (with „Data“ font) (High Speed draft mode)
- STANDARD (with font „Data“) (Draft mode)

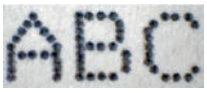

LETTER FONT QUAL.

Different print quality levels can be selected:

- NLQ (Letter Quality).
- LQ (Letter Quality).

GRAFIK QUAL.

Four different levels of graphics quality are selectable:

- Standard 180 dots per inch (360 pts horizontal possible) *

Possible graphics accelerations with output resolution 180 x 180 dpi (driver)

- Win. LQ 180 dots per inch
- Win. NLQ 90 dots per inch
- WI. Draft 60 dots per inch

BARCODE QUAL

- NLQ *
- LQ

FONT

Font is a name for characters of the same style and size. They are combined into a set. The appearance of the font can be changed with attributes such as size, bold, italic etc.

The following fonts are available in the printer

- Data
- Roman
- Sans Serif
- Courier
- Prestige
- Script
- OCR B
- OCR A
- Orator-C
- Orator
- DATA LARGE

see also examples of printing in Appendix B.

Note: The printer test HW generates a printout of all available FONTS.

The interbal barcodes of the printer will not be printed. For details on barcode printing, refer to Appendix F Barcodes Quick Reference.

PITCH

Denotes the number of printed characters per inch.

For all existing fonts, all types of fonts can be set. In some cases, this may conflict with the style of the font

The following pitches are available per FONT:

- 10 CPI
- 12 CPI
- 15 CPI
- 17 CPI
- 18 CPI
- 20 CPI
- PROPORTIONAL

LINES

Determines the number of lines per inch.

The following lines / Inch areavailable:

- 2 LINES/INCH
- 3 LINES/INCH
- 4 LINES/INCH
- 6 LINES/INCH
- 8 LINES/INCH
- 12 LINES/INCH

EMULATION

The emulation sets the available command scope of the printer (see Appendix D and E).
The following emulations can be activated:

- EPSON LQ / ESC/P2
- IBM PROPR.
- IBM PROPR. AGM

Note: The selected emulation is also saved in the MACRO. Changing the MACRO by pressing the key can change the emulation.

Caution: An emulation should not be changed within a running application!

CHARACTER SET

The selected character set must be specified by the corresponding country variant in the next step.
Appendix B contains detailed print examples and Appendix C the character set tables.
The default character set may change when other Macros are set.

The following pre-Adjustments are factory-set in the Macros:

- The IBM PROPR emulation with IBM SET 2 character set.
- The EPSON / ESC / P2 emulation with character set EPSON EXT.GCT.

LEFT MARGIN

The left edge is set in steps of 1/10 inch. The position of the first left margin is 1/10 inch from the left edge of the paper and shows the left margin of the letter H. The left margin can be set to a maximum of 16/10 inches.

RIGHT MARGIN

The right margin is set at print position, measured from the position of the first left margin. Fixed value 80/132/136. 136 = (default setting)

TOP MARGIN

The Top margin is set at print position, measured from the position of the first line offset in a Range 1 to 16; lines $^{1}/_{6}$ Inch)

BOTTOM MARGIN

The Bottom margin is set at last print position, measured from the bottom edge of the paperof in lines with a Range 1 to 8; lines $^{1}/_{6}$ Inch)

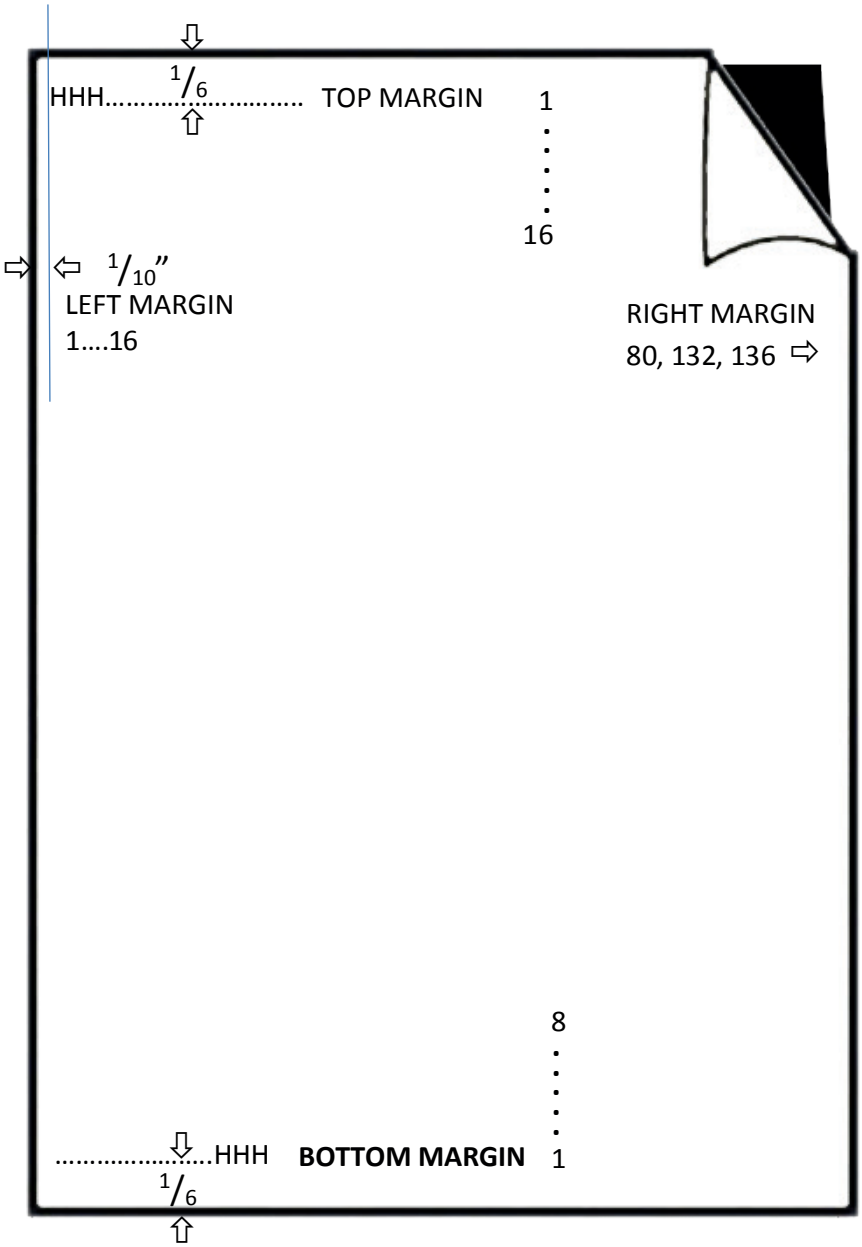

LINE MODE

- If LF = LF + CR is set, a carriage return (CR) is also performed for every line feed (LF) received by the interface.
- If CR = LF + CR is set, a line feed (LF) is also performed for each carriage return (CR) received from the interface.

PERFORATIONS SKIP

STANDARD FUNCTION:

- When PERF.SPRING = YES is set, the printer uses the upper and lower margins of the paper.
- If the PERF.SPRING setting is NO, it will print across the perforation. ON 12 inch form can be printed on all 72 lines with this setting. This setting ignores all values for the top and bottom.

SPECIAL FUNCTION:

Lifting up the print head by passing the perforation, means the area of the paper fold

To prevent a paper jam while paper edges (fold) touhes the ribbon guide, the printhead needs more distance (GAP). For this the menu item PERFORATION SKIP with overlapping may used.

- When **PERF.SKIP = YES / OVERLAPP** is set, the printer uses the top and bottom paper margins (1 inch) and raises the printhead to most upper position to that area.

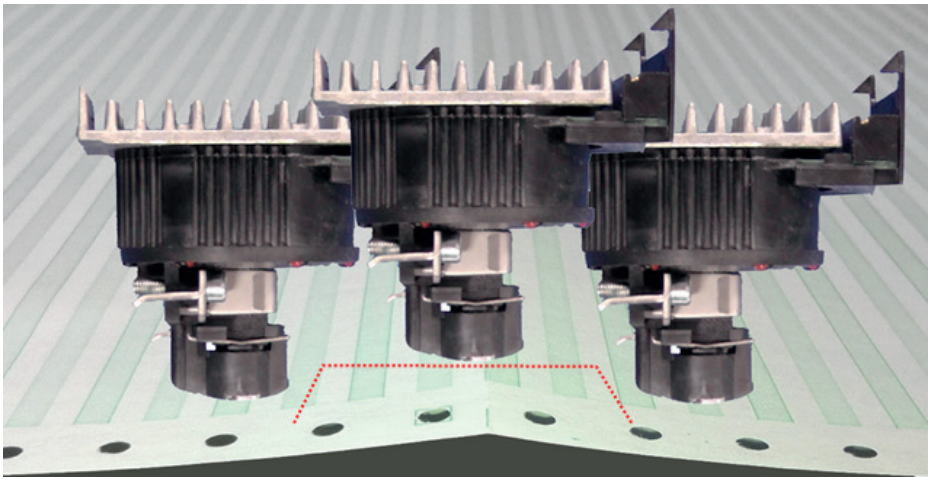

- If **PERF.SKIP = NO / OVERLAP**P is set, the print will print across the perforation and will raise the print head up only in the area of perforation.

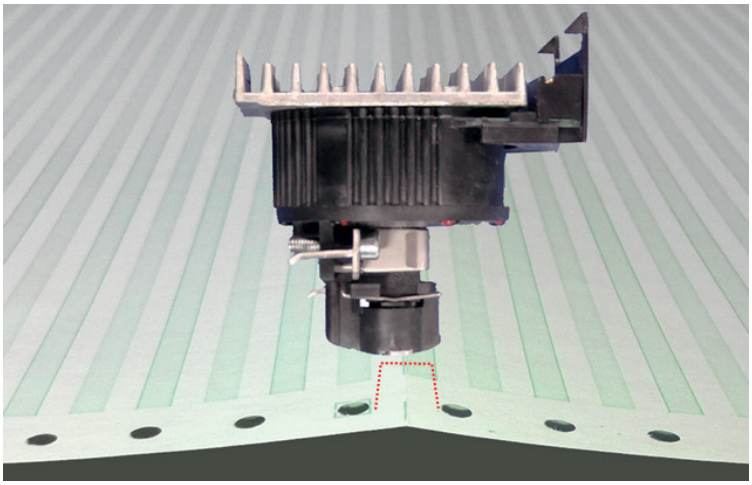

TEAR OFF

In this mode, various adjustments for tear off or cut are possible:

- NO
- TEAR OFF 10 S.FF
- TEAR OFF 10 S.
- TEAR OFF 1 S. FF
- TEAR OFF 1 S.

- If the TEAR OFF 1S or 10S setting is selected, the printer waits for eine second or ten seconds, and if no more data is received, the paper is transported to the first perforation after the text.
- When switching to a different paper source, the continuous paper currently being processed must always be torn off before it is moved to the park position, regardless of this setting.

- The setting NO causes neither an automatic feed to the tear-off position, nor is it automatically cut at the side boundary. This is the correct setting for the stack tray of a continuous set.
- The TEAR OFF 10 S setting causes a form to be automatically transported to the tear-off position if no data has been received within a print job for a period of 10 seconds. If fürther data is transmitted after this time and has not been separated, the printout will continue at the last print position. However, if it has been separated, the printout starts on the first line of the next page. This setting option supports applications that work without form feed commands at the end of a print job.
- The setting TEAR OFF 1 S causes a form to be automatically transported to the tear-off position if no more data has been received within a print job after a form feed command for a duration of 1 second. If fürther data are transmitted after this time, the printout will continue on the first line of the next page. A form must always be tar off before move into the park position.

$$ EMULATION

If set to $$ COMMAND = YES, an ASCII control code can be sent to the printer. The printer then interprets a $$ (HEX 24 24) as ESC [(HEX = 1B 5B).

$$ = Control String Introducer for **ESC [** = CSI = HEX 1B 5B

$$ / = Control String Introducer for **ESC** = HEX

Example:

Select lower tractor
ESC [7 s

Hex:	1B	5B	37	73
Dec:	27	91	55	115
$$:	$$	7	s	

4.6.3 INSTALLATION

INTERFACE

INTERFACE TYP (I/F TYP)
The following interfaces are available:

- Parallel / RS232
- Parallel / RS422
- Parallel
- USB
- Shared (all interfaces are activ)
- Ethernet (Only in corresponding interface modules / option)

With the setting PARALL./RS2 and PARALL./RS422, the respective interfaces are active after switching on the printer. If the parameters for the parallel or serial interface need to be changed, the relevant information can be found in Appendix A Interface Desription.
The default for: PARALL./RS232 are:

- 8 Kbytes buffer,
- 8-bit word length,
- parity EVEN,
- 9600 baud,
- DTR protocol,
- DSR / CTS mode ignore

WORD LENGHT

Length of characters to be transmitted; the values are 7 or 8 bits.

BAUD-RATE

The baud rate controls the speed of the data transfer. The possible transfer rates are: 600, 1200, 2400, 4800, 9600, 19200 or 38400 bits per second.

PARITY

For security of data transmission, the transmission can be checked by means of EVEN or ODD test marks. The following values are possible here: EVEN, ODD or Neine.

PROTOCOL

You can choose between DTR, XON / XOFF or XON / XOFF + DTR.

Note: An automatic change from DTR to XON / XOFF takes place when the interface is selected by RS 422**.**

BUFFER

Buffer size in Kbytes; the maximum buffer size is 160 KByte.

AGC POSITION

AGC (**A**utomatic **G**ap **C**ontrol, automatic distance control) is an important function of the printer in terms of paper processing, which allows the use of different paper thicknesses while maintaining the same print quality.

The printing gap is set automatically when feeding paper as follows:

- after the paper source has been changed
- Moving in from the parking position
- after turning on the printer
- after the printer was in STOP mode
- if an AGC command was effective

The reference point for measuring the paper thickness is the „AGC-POSITION“ in the first or current print line. The default value for the horizontal AGC position is 24. Any position from 4 to 87 (PP 803 printer) or from 4 to 131 (PP 806 and PP 809 printers) in steps of 10 characters / inch can be selected.

Adjusting the AGC position is only required if a measurement at the default position does not reflect the actual paper thickness in the print area, or if the default setting is within one paper edge area (eg label, carrier tape forms), as the measurement process requires a smooth paper surface , See also Appendix D or E Quick Reference for the AGC / PCC command.

AGC ADJUST

This is a basic adjustment which is automatically performed at the initial Power On of the printer, and which there after only needs to be initiated after having exchanged the print head or the platen. It is essential that the ink ribbon is installed and **no paper** is in the printer when this procedure is started. After activating this procedure, the printer displays
INSTALL RIBBON. If the ribbon is installed press to continue

PAPIER-IN ADJ. (Paper-In-Sensor adjustment)

This parameter logically adjusts the base position of the Run-In-Sensor. The factory set value is such that the default is set to compensate specific Mechanical tolerances. The adjustment range is from -3 to +4 in ($^{1}/_{60}$“) Inch steps).
(0.42 mm), where „**-**“ means an upward movement and „**+**“ a downward movement. When implemented, the adjustment applies to all paper paths

TEAROFF V-POS (vertical adjustment for the tear-off position)

This parameter can be used to compensate mechanical tolerances which may cause a misalignment between the perforation edge of a continuous form and the tear-off position.

The range within which variations can be met is **- $^{15}/_{60}$"** bis **+ $^{360}/_{60}$"** the page and „+" is further down the page.

The following table shows the possible values in inches and millimeters.

Note: If, for some reason, it is not desired to cut exactly on the perforation, it is very important to ***cut below the perforation*** of the printed page. If the paper is cut above the perforation the remaining paper can easily bend and cause a paper jam. Do not cut through a label as the blade would get dirty by the glue.

+/-1 = +/- $^{1}/_{50}$" = +/-0,42 mm	+/-9 = +/- $^{9}/_{50}$" = +/-3,81 mm
+/-2 = +/- $^{2}/_{50}$" = +/-0,85 mm	+/-10 = +/- $^{10}/_{50}$" = +/-4.23 mm
+/-3 = +/- $^{3}/_{50}$" = +/-1,27 mm	+/-11 = +/- $^{11}/_{50}$" = +/-4,66 mm
+/-4 = +/- $^{4}/_{50}$" = +/-1,69 mm	+/-12 = +/- $^{12}/_{50}$" = +/-5,08 mm
+/-5 = +/- $^{5}/_{50}$" = +/-2,12 mm	+/-13 = +/- $^{13}/_{50}$" = +/-5,50 mm
+/-6 = +/- $^{6}/_{50}$" = +/-2,54 mm	+/-14 = +/- $^{14}/_{50}$" = +/-5,93 mm
+/-7 = +/- $^{7}/_{50}$" = +/-2,96 mm	+/-15 = +/- $^{15}/_{50}$" = +/-6,35 mm
+/-8 = +/- $^{8}/_{50}$" = +/-0,42 mm	+/-16 = +/- $^{16}/_{50}$" = +/-6,77 mm

Uni-Direct.CMD (Unidirectional Command)
If NO is selected, commands for unidirectional printing will be ignored. The default setting of YES means that commands will be carried out to switch from bidirectional to unidirectional or reverse.

TRACT.FF-MODE (Tractor Form Feed Mode)
EXECUTE FF means, every Form Feed sent to the printer will be executed. If you set IGNORE FF, only a Form Feed before printable characters will be executed, that means blank pages will be ignored.

Special Sub-Items under INSTALLATION

LAGUAGE
The operator panel may display its messages in three languages. Select one out of the following: ENGLISH, DEUTSCH, FRANCAIS, TURKISH, ITALIAN,

RESTORE SETUP
With this function all settings of the last SAVE procedure will be restored.

MENU ACCESS

There are four possibilities to define the access to the menu by the user.

ALL FUNCTIONS

All functions can be used (default)

QUICK SET. OFF

With this function the Quick Settings for Macro Selection, Vertical Position Adjustment, and Fanfold Displacement can be deactivated in the READY or BUSY mode. After pressing one of these keys the display shows shortly LOCKED (see also Chapter 2).

MACROS ONLY

Macros can be selected using the Quick Macro Keys

- The Vertical Positioning Adjustment Mode can be entered
- The Fanfold Displacement Mode can be entered.

NO ACCESS

The menu is not accessible at all..

The menu function PRINT OUT can be activated regardless of the defined menu access.

Note: Only the system manager is able to reset the functions MACROS ONLY and NO ACCESS.

FACTORY DEFAULT

Selecting YES will reload the factory settings for all values and become active. The contents of the page counter and the PAPER-IN-SENSOR parameters are not changed.

Note: If the factory setting is to be active again after switching off and on, the FUNCTION MENU SAVE must be performed after the RECALL.

PROGRAMM UPDATE

Enables loading of a new firmware. Here, this is only possible by transfer from a computer system. All menu settings are reset to factory values !.

5. Maintenance

Preferred Materials
The following materials and cleaning lubricants are recommended for use in the maintenance procedure:

- Lint-free cloth
- Vacuum cleaner.

5.1 Preventive measures

The user should clean the printer every six months or after 50,000 prints, whichever occurs first. If you experience paper feed problems, or if the print head carriage movement becomes affected, cleaning should be carried out more often.

Note: the Page Counter (PGCNT) in the PRINT-TEST 3 will give you information about actual number of printed pages. See sample next page.

CONFIGURATION

FW	20815776	F-D	0.2	F-X	0.3	PM	00-013665-0
NFQ	1500	DSF	100	NLSF	100	LSF	100
GSF	80	NFT	270	TNA1	230	TNA2	260
TNA3	260	CAC	2.60	NDLC	2.2	PGC	46
PGCNT	**143299**	SBP	36				

C031 ISO 8859/1	CO32 ISO 8859/15	CO34 ISO 8859/5
CO32 ISO 8859/9	C061 IBM SET 1	C062 IBM SET 2
C063 IBM CODE PAGE	C071 EPSON EXT. GCT	C100 CODE PAGE EE
C101 CODE PAGE EE2	C912 GREEK CHR. SET	C069 ALL ICT TABLE
C091 BARCODE		

DATA		ROMAN	NLQ	ROMAN	LQ
SANS SERIF	NLQ	SANS SERIF	LQ	COURIER	NLQ
COURIER	LQ	PRESTIGE	NLQ	PRESTIGE	LQ
SCRIPT	NLQ	SCRIPT	LQ	OCR B	LQ
OCR A	LQ	ORATOR-C	NLQ	ORATOR-C	LQ
ORATOR	NLQ	ORATOR	LQ	DATA LARGE	

CHARACTER SET : EPSON EXT. GCT 1: U.S.A.

etc.

5.2 Cleaning

- Power off prints,
- Remove the top cover
- Remove ribbon
- Thoroughly clean and vacuum all accessible areas to remove scraps of paper and dust
- Clean the platen surface, paper pressure rollers, and transport rollers with the platen roller cleaner
- Clean the covers and the control panel area with a damp, lint-free cloth. Avoid solvent and excess liquid.
- Insert ribbon (see ribbon cartridge section)
- Reinstall the top cover.

5.3 Replacing the wearing parts

5.3.1 Change print head

The lifetime of Printhead is specified at 600 million strokes per needle. That is about 350,000 pages measured on the basis of Dr. Grauert Letter (compare page counter „PGCNT“ in printer test TEST 3).

Remove print head

Note: Immediately after printing, the print head can become very hot.

- Turn on the printer, remove Stacker (1) open the top cover (2), and lift it up.
- The print head moves to the position opposite the green insertion aid over the oval sheet metal cutout.
- Switch the printer off.
- Remove the ribbon cassette (3).
- Disconnect the printhead cable (4).
- Using the supplied tool (Allen) (7) loosen the two fixing screws (6) of the printhead. The enclosed plastic sleeve is to be used as an extension for the Allen (7) key.
- Pull the printhead (5) out of the printer.

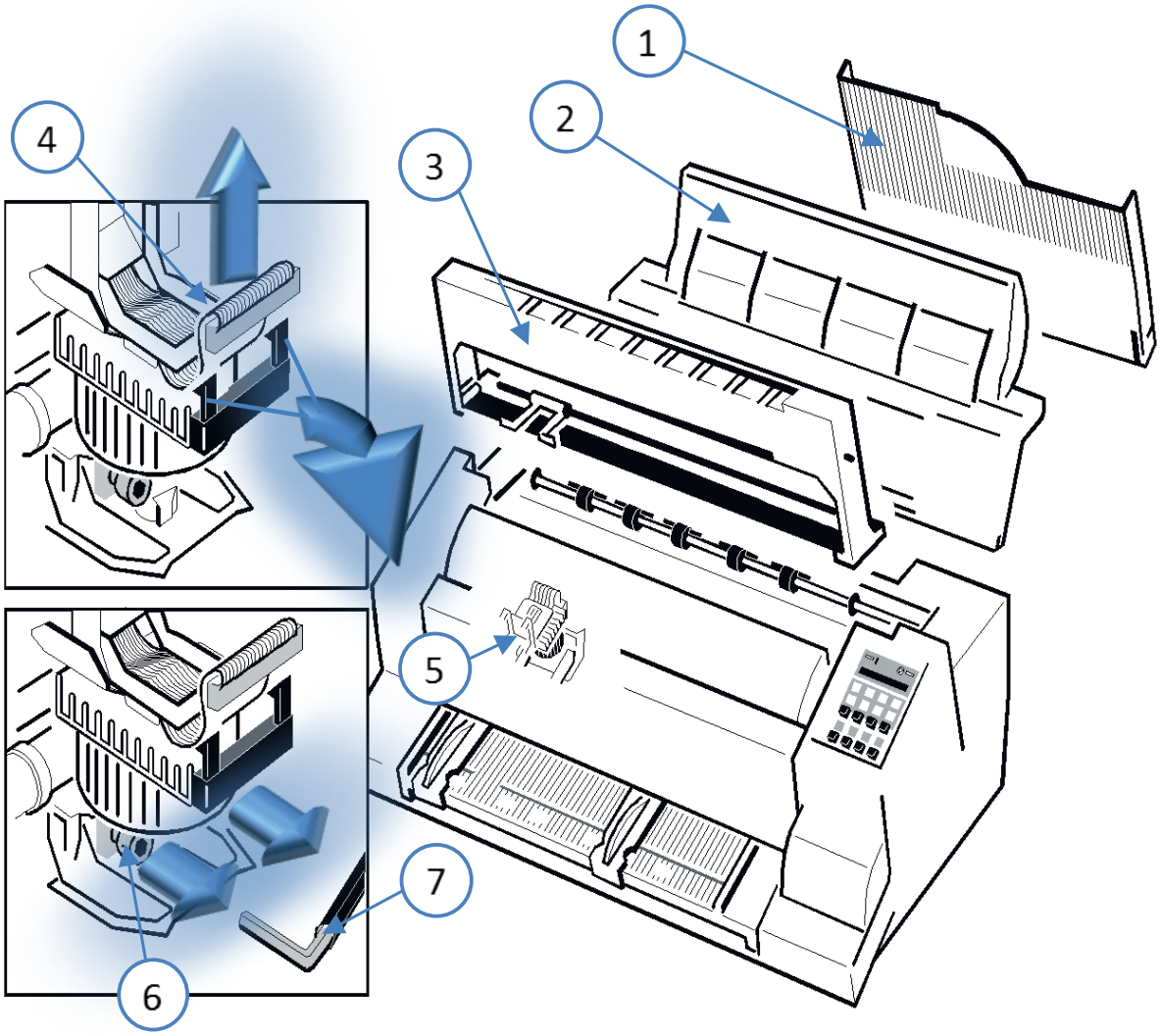

Install print head

The new print head (DK) is pushed into the holder.

Make sure that the printer is switched off. When installing the print head, the carriage should be aligned with the cutout in the paper guide plate (same position as when removing).
Hold the print head (5) in its installed position and press it against its stop in the direction of the platen.

The two lugs of the mounting bracket (3) support this process.

Tighten the two screws (6) as follows:

- First, tighten the right-hand screw until it stops, then fix the left-hand screw
- Now fix the right-hand screw
- Put the enclosed sleeve on the Allen key (7) and tighten the right and then the left fastening screw

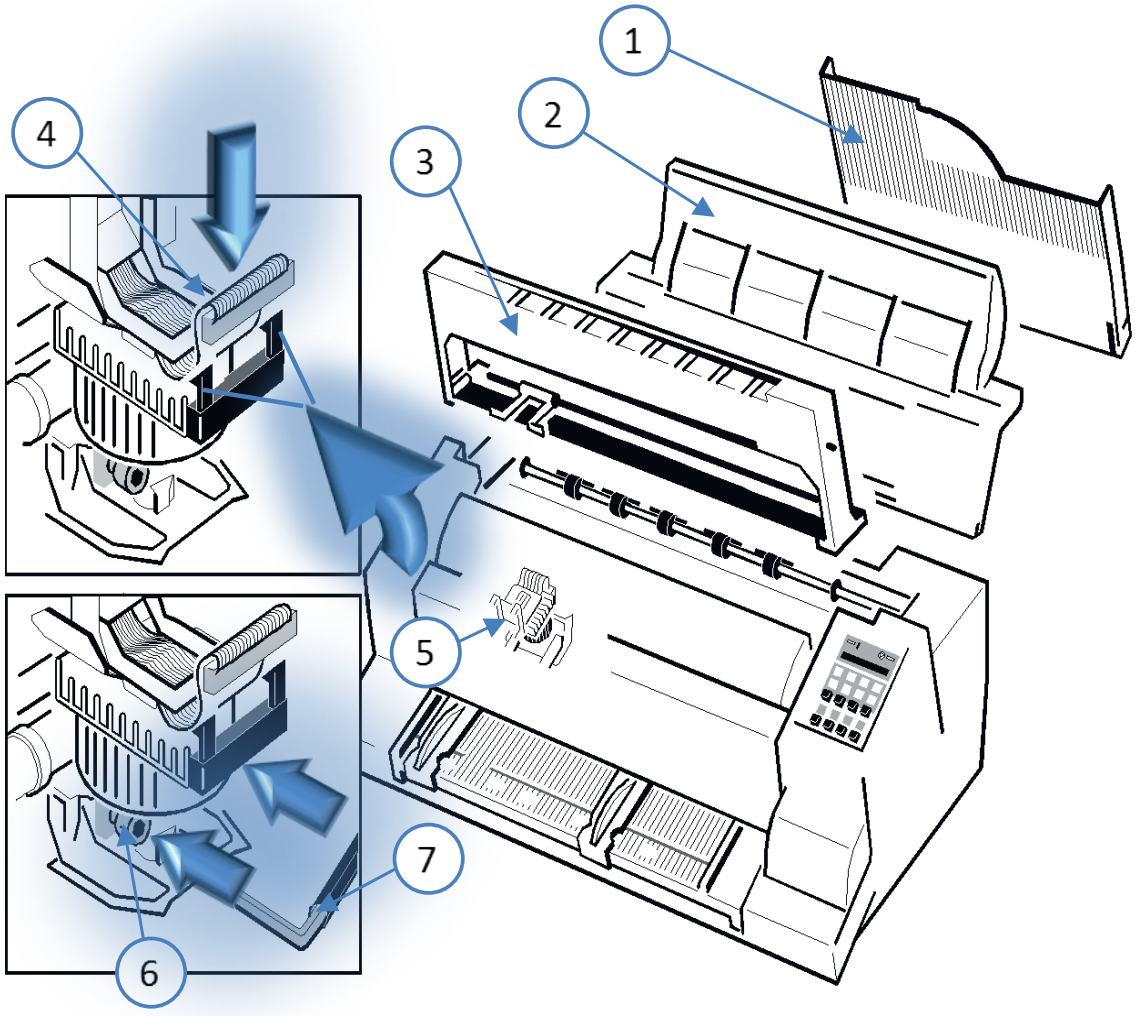

- eplace the print head cable (4). The retaining lugs (8) must click into place.
- Insert ribbon and close the top cover.
- Turn on the printer.
- For a loaded ribbon without paper, start the „AGC ADJUST“ menu function.

5.3.2 Change platen roller

A change of the platen roller may become necessary after about 800,000 pages (compare page counter „PGCNT“ in the printer test HW-AUSBAU).

Remove platen roller

- Open the top cover and remove it upwards.
- Remove the ribbon cassette.
- Turn off the printer.
- Push the print head (3) to the far right.
- Release the green lock (2) on the left end of the platen.
- Pull the platen roller (1) about 10 mm to the left, then release the left end of the platen roller from its holder and remove the platen roller from the right holder.
- Remove the platen roller (1) from the printer.

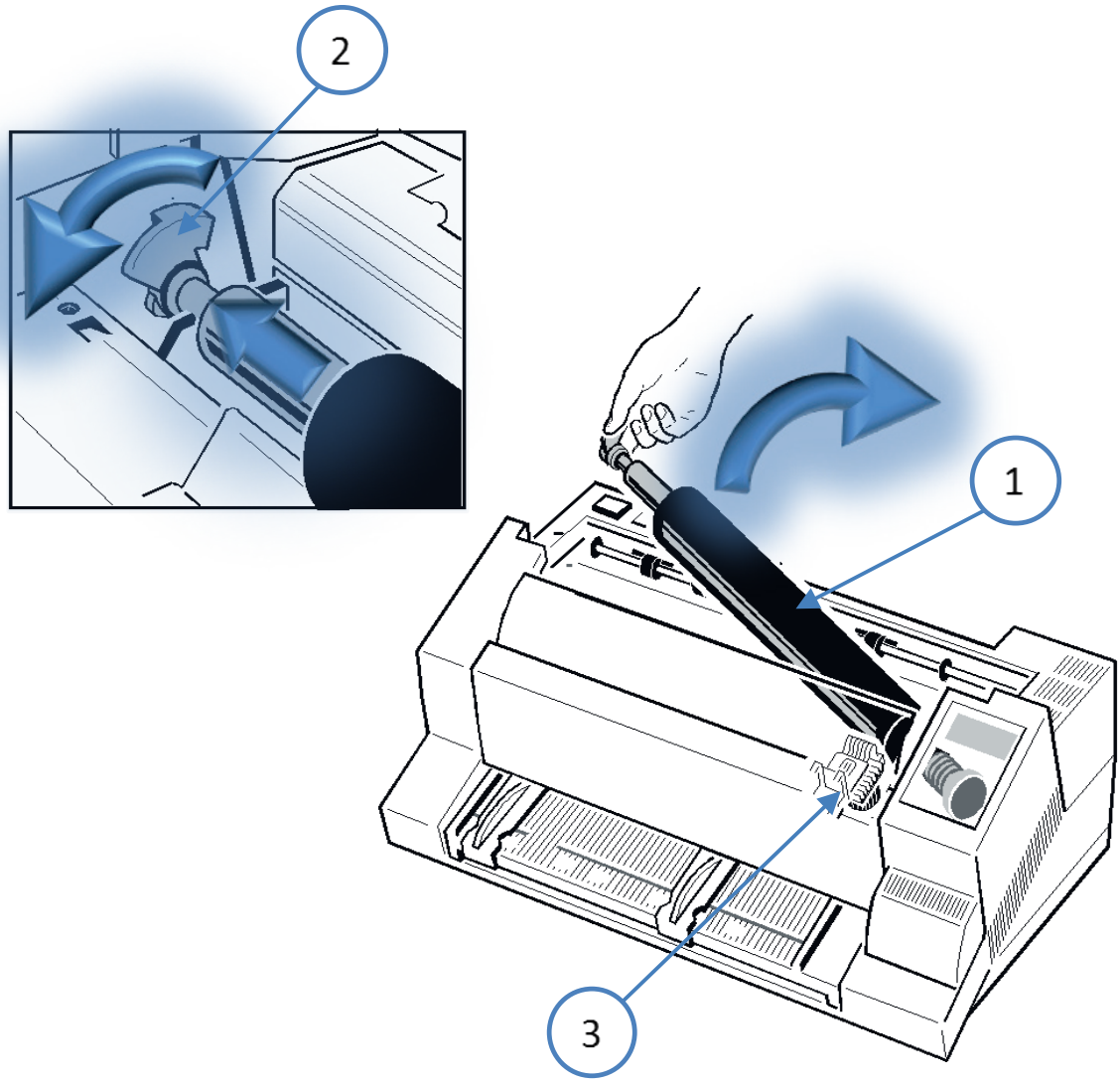

Install platen roller

Make sure that the printer is switched off.

- Position the platen (1) in its original position.
- Pull the printhead (3) from the right to the center.
- Insert the geared end of the platen into the right bracket.
- Make sure that the green lock (2) is up, then press the platen roller left into its holder. The platen is locked by pushing the lock (2) backwards.
- Insert the ribbon cartridge.
- Swing the cutter (9) into place and snap it into place (only with the high-performance continuous printer with cutter)
- Insert and close the top cover.
- For a loaded ribbon without paper, start the AGC ADJUST menu function (see Appendix

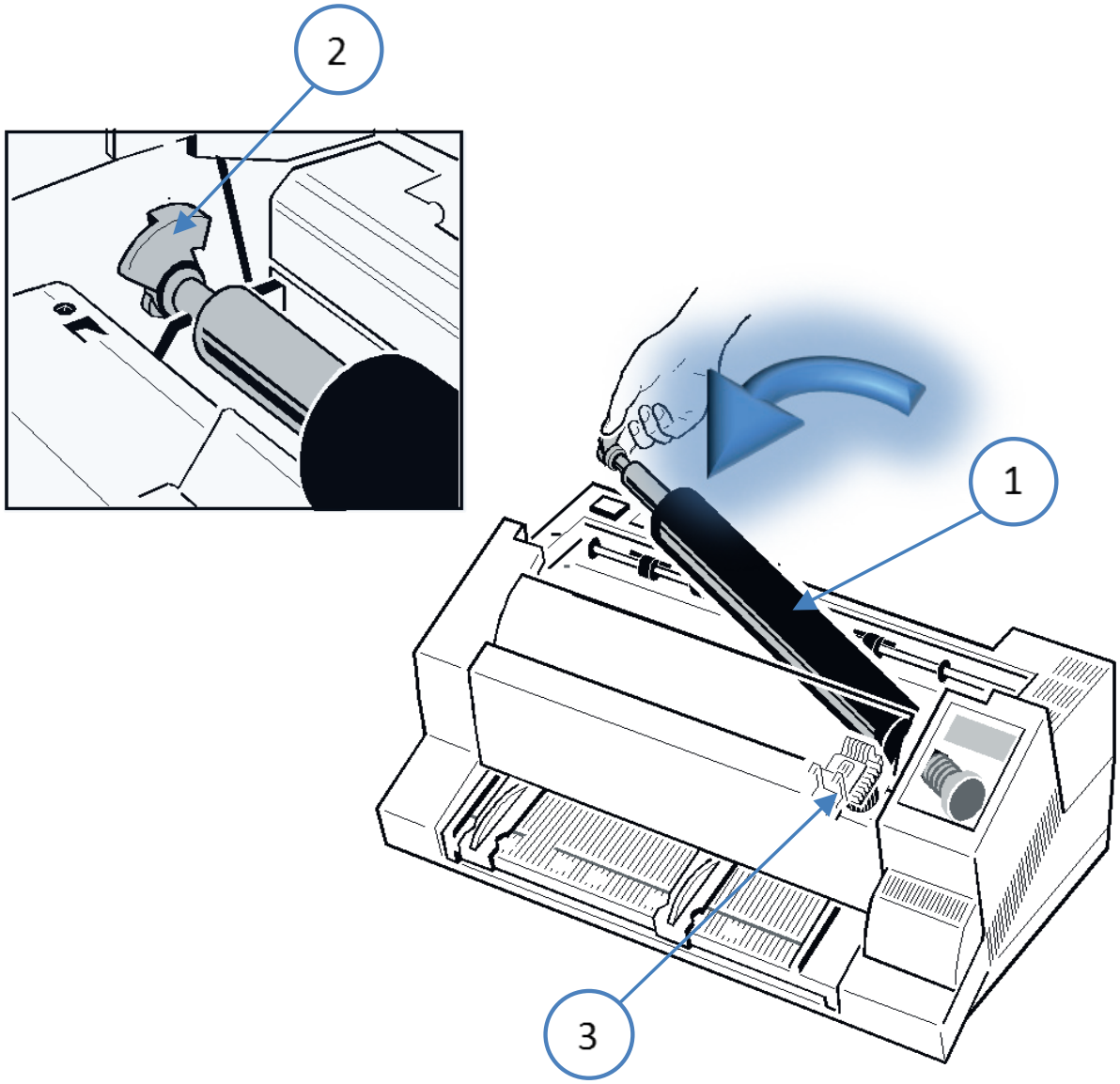

6. Troubleshooting and diagnostics

How to work with this Chapter

First, find the category that fits the problem with your printer. The categories are:

1. Problems related to the power supply
2. Error messages
3. No print out
4. Problems with the operation
5. Printing problems
6. Problems with the ribbon or the carriage
7. Error diagrams

If the printout is very weak (hard to read), see the section „Printing Problems“.

1. Find the symptom description that best matches the printer malfunction. In this example, this would be the symptom description „expression weak or of poor quality“.
2. Carry out the corrective action mentioned in the first place.
3. If this does not solve the problem, follow the second step.
4. If none of the suggested actions solve the problem, or if the error is not listed, contact your service representative.

Each time the printer is turned on, the message TEST is displayed as long as the internal printer tests are performed. When the tests are completed successfully, the message READY 1 ELQ is displayed. If an error message appears, please refer to the following sections.

6.1 Power related Problems

- Power-on indicator does not light up when the power is turned on.
- Check that the power cord and power plug are properly connected to the printer and a wall outlet.
- Have the power connections (and fuse, if installed) checked.
- Have the power supply in the building checked.

6.2 Error messages

6.2.1 Self-test error

After turning on the printer, a self-test will automatically run. In case of an error, one of the following messages appears on the display:

SELECTION	MEANING	CAUSE
No information POWER ON LED is not lit !.	No Power	• Power cord connected? • Control unit (CUDEV) defective • Wrong volt setting
Yellow and or green LED is lit, but no further reaction	Error after switching on	• Power supply or CU-DEV defective
########	Firmware ot work	• PM not installed • PM not properly installed • no firmware on the PM or defective
TEST.... **(Flashing)**	Initialization of the EEPROM/ Flash	• Printer was switched on for the first time with a PM • Another PM was installed with different firmware • Contents of the EEPROM incorrect

Wenn alle Tests erfolgreich abgeschlossen sind, erschONt die folgende Meldung:

SELECTION	MEANIG	STATE
READY 1 ELQ or **BUSY 1 ELQ**	printer starts normal	The printer is operable

During operation, the following error messages can occur or be displayed:

Note: The printer will change to STOP mode in case of an error. It must after troubleshooting with the key to return to the READY mode.

If the error can not be resolved with the help of the recommended actions, please inform the service responsible for them!

6.2.2 Faults during printing

During normal operation, the following error messages may occur:

DISPLAY	MEANING	CAUSE
STOP	The printer is in STOP mode	Press to continue
COVER OPEN	Top cover is open and the printer is in READY or BUSY mode	Close the cover and press to continue
LOAD TRACTOR LOWER / UPPER	Displayed when the host computer issues a paper feed or print command and no paper is left. The printer switches to STOP mode.	Insert paper and press
PAPER JAM TRF	Displayed if the continuous paper is not transported correctly when using the tractor feeder with successive line feeds.	**for troubleshooting see section 4.4 Operating Problems and section 4.8 Error Diagra**[ms.]
PAP. TEAR OFF	Appears when switching from the current paper source to another paper source and the continuous paper could not be moved to the park position. The continuous paper must be torn off along the back edge of the printer, which is directly above the continuous paper exit (from left to right).	press , so that the paper is moved back to the park position so that the newly selected paper source can be used.
REMOVE PAPER	Displayed when switching from the currently selected tractor to another paper source, where the continuous paper could not be moved to the park position. The continuous paper must be torn along the back edge of the printer, which is just above the rear paper exit and torn off (from left to right).	Remove Paperand press

6.2.3 Technical Error

SELECTION	MEANING	CAUSE
AGC ERROR	The AGC ADJUST Procedure is faulty	• Distance print head to platen faulty • Print head loose • The paten is not installed correctly • No ribbon installed by AGC adjust
HORIZ. ERROR	Hrizontal drive withoutFunction	• Horizontal drive is blocked • Paper Jam • Wrong AGC GAP • AGC procedure performed in an ineligible position • Platen installed incorrectly • Forget to perform an AGC ADJUST Procedure after print head or platen change • Encoder stripe is missing or defekt (dirty) • Encoder defective • Horizontal drive motor defective
PARITY ERROR	Protocol Error	• Check protocol setting of printer and host • Repeat data transfer
BUFFER OVERFLOW	Handshake protocol error	• Check CTR - CTS or XON - XOFF protocol • Repeat data transfer
FRAMING ERROR	Protocol Error	• Check protocol setting of printer and host • Repeat data transfer

6.2.4 No Print out

Test print out does not start.

- Check, that all covers has been closed.
- Check, that paper is loaded in the printer.

6.2.5 Printing does not start

- Make sure that the READY or BUSY message is displayed. If there is a different message displayed please refer to the above error message table.
- Make sure that the printer is connected to the host computer. (Refer to section 1.13 Connection to a Computer). Make sure that connectors are properly fixed at both ends.
- Make sure that the printer is receiving data from the host computer.
- Make sure that the correct protocol is enabled. (Refer to Appendix A.2 Configuring the Printer and Appendix B Interface Description)
- Make sure that you have selected the correct port (if the automatic feature has not been selected).
- Make sure that paper is loaded.
- Make sure that the ribbon is installed.
- Examine the ribbon path. Does the ribbon pass in front of the whole printhead? Adjust the ribbon if necessary.
- Fanfold paper in lower or upper tractor does not advance
- Make sure that the right tractor is selected.

6.2.6 Operation related problems

Paper is not positioned at perforation for tear-off

- Select the correct form length using the Set-up feature.
- Seset top of form by performing a Parking function.
- Refer to Appendix **A.4 Vertical Positioning Adjustment**.

Paper tears or jams

- Examine the paper path; remove any obstructions
- Is the paper too loose or too taut between the tractors?
- If the holes in the paper are deformed at their outer edges, the paper is too taut.
- If the paper rises between the tractors, it is too loose.
- Readjust the tractor spacing so that the paper lies smoothly but without any tension.
- Ensure that the paper is horizontally aligned on the pins.
- Open the printer‘s top cover. If necessary, loosen the two green screws and remove the paper guide plate to gain access to the paper

Parking paper and resetting top of form

Tear off paper on perforation (fold)

Press

Press until the paper is in the park position.

Press Printing will resume at the top of the next form.

Print head carriage does not move smoothly/does not move at all

- Examine the paper path. Remove any obstructions.
- Examine the carriage area for obstructions. Remove, where necessary.
- Press until the paper is in the park position.
- Make sure that the transport lock has been removed

6.2.7 Print related problems

Expression weak or of poor quality.

- Was the right paper used? Chapter 7 Technical Data contains a detailed specification of usable paper types. Replace the paper if it does not conform to specification.
- Check that the ribbon is properly tensioned.
- Does the ribbon have to be replaced? If necessary, replace with a new ribbon.
- Is the ribbon cassette used correctly? Adjust if necessary.

Characters do not print evenly or are not uniform in pitch

- Examine the paper path for dirt or other obstruction that may cause the gap between print head and platen to vary. Remove the obstruction.

Printed lines overlap.

- Examine the paper path for dirt or other obstructions that may prevent the platen from rotating freely. Remove the obstruction.

Part of printed text is missing (loss of data)

- If you are using Serial communications check the buffer control setting in Set-up.
- Check the data flow control setting on the host computer.

If the printout or the character set is not ok, the following procedure can help to clear the situation.

SELECTION	RESULT	CHECK
Select and start PRINT TEST 1	Print not OK or partly missing?	• PAPER SOURCE • selection incorrect Ribbon worn or not installed • Print head worn
Stop SELF TEST and start regular printing	No printing starts	• Printer **READY 1 ELQ ?** • Interface cable not connected properly • Interface selection incorrectg
	Some characters are not correct	• Emulation • Character set • National version • Word length • Baud rate • Parity bit • Protocol
	Font (FONT) nd / or Pitch quality false	• Font • Pitch • Line
	Problem still there?	SCall servive

6.2.8 Problems with ribbon or print carriage

If you have problems with the ribbon, make sure that the ribbon is:

- is properly tensioned
- not worn or dried out
- not torn or otherwise damaged
- not jammed or overturned

Carriage does not move smoothly:

- Check the paper path.
- Remove any obstacles.
- Check if all packaging material has been removed.
- Check the carriage area for foreign objects.
- Remove any foreign objects.

6.3 Process diagrams for troubleshooting

6.3.1 Paper jam TRF

Note: Do not turn off the printer in case of a paper jam to avoid data loss.

- Lift and remove the top cover.

The area where paper could be jammed is accessible now.

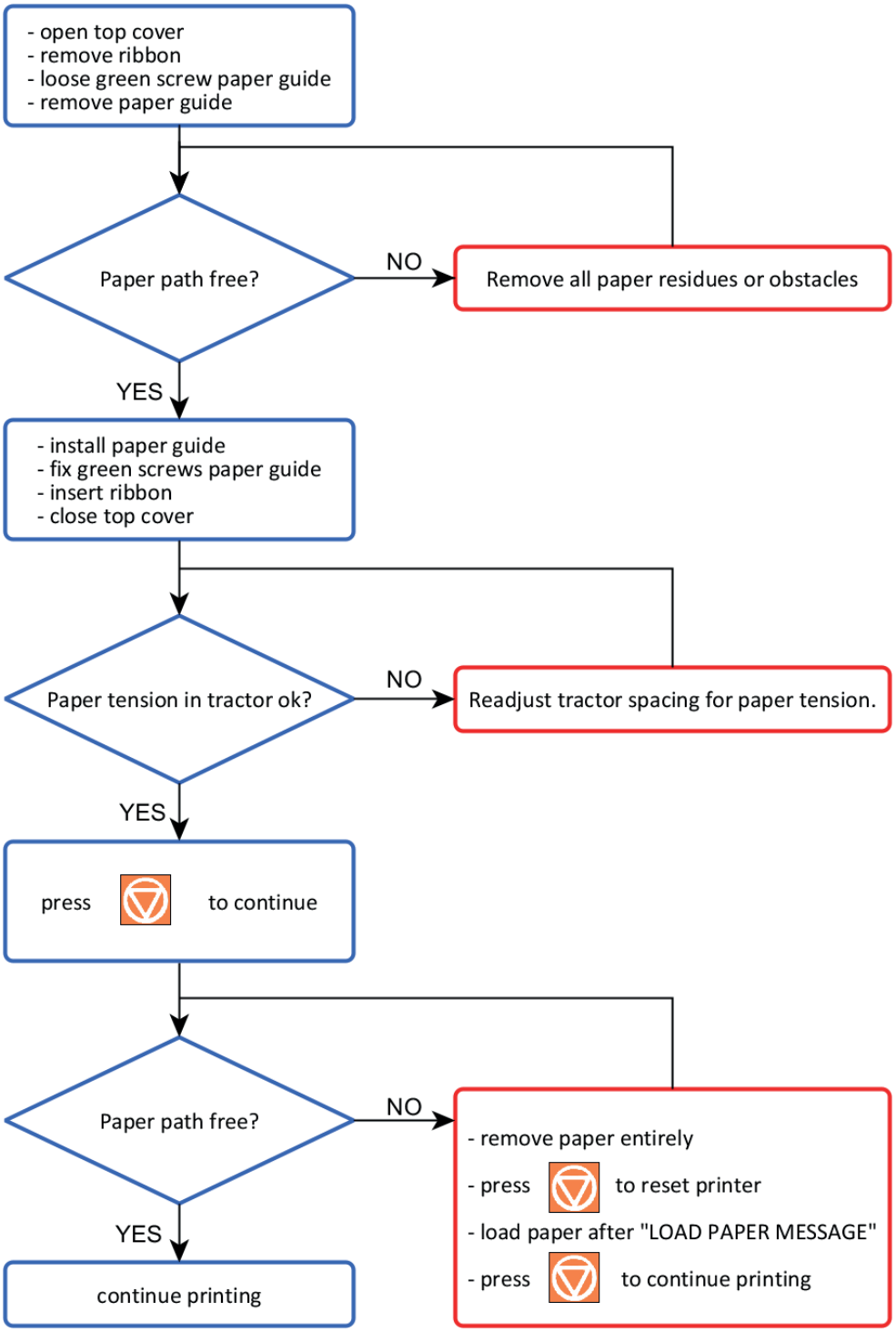

6.3.2 Paper jam ASF (only Multi-Purpose Printer) or MANUAL

Note: Do not turn off the printer in case of a paper jam to avoid data loss.

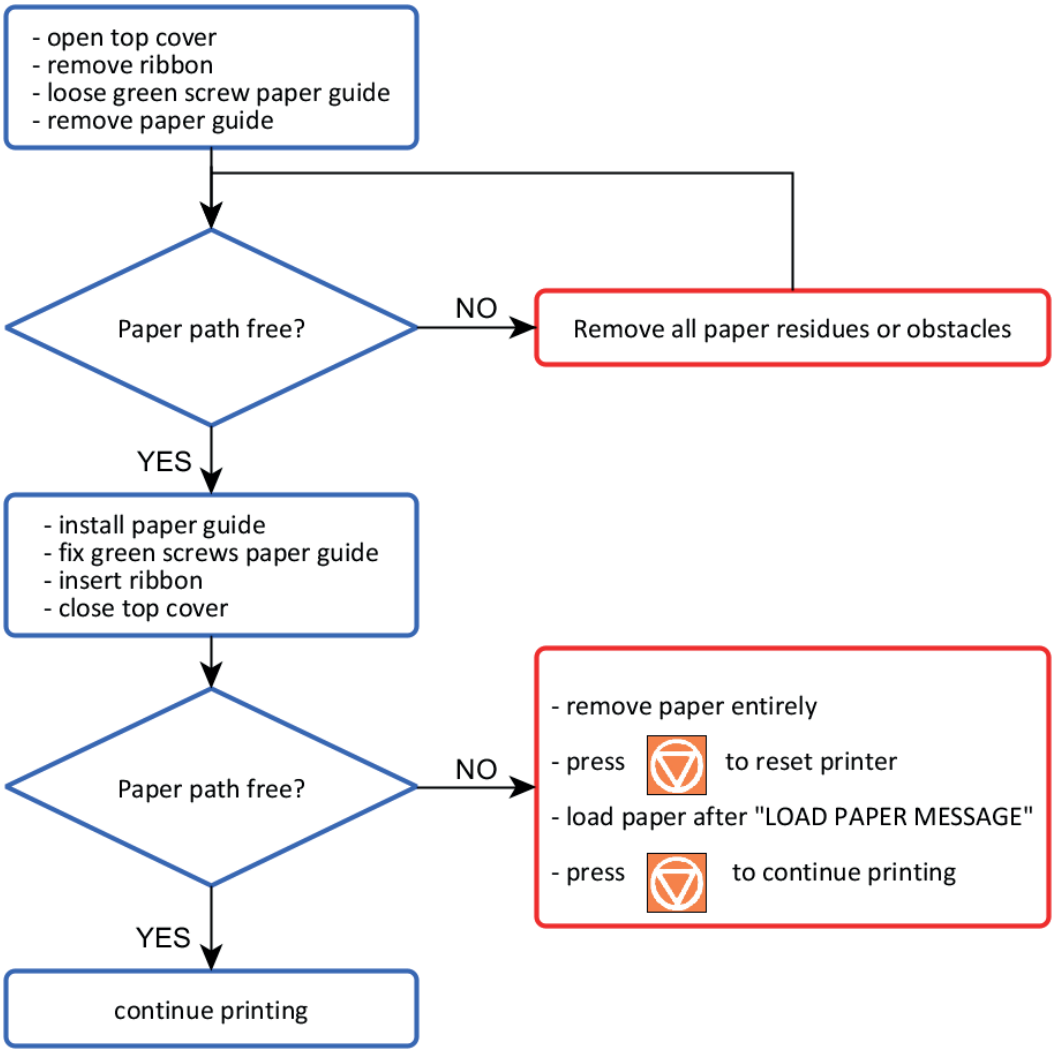

6.3.3 No printout

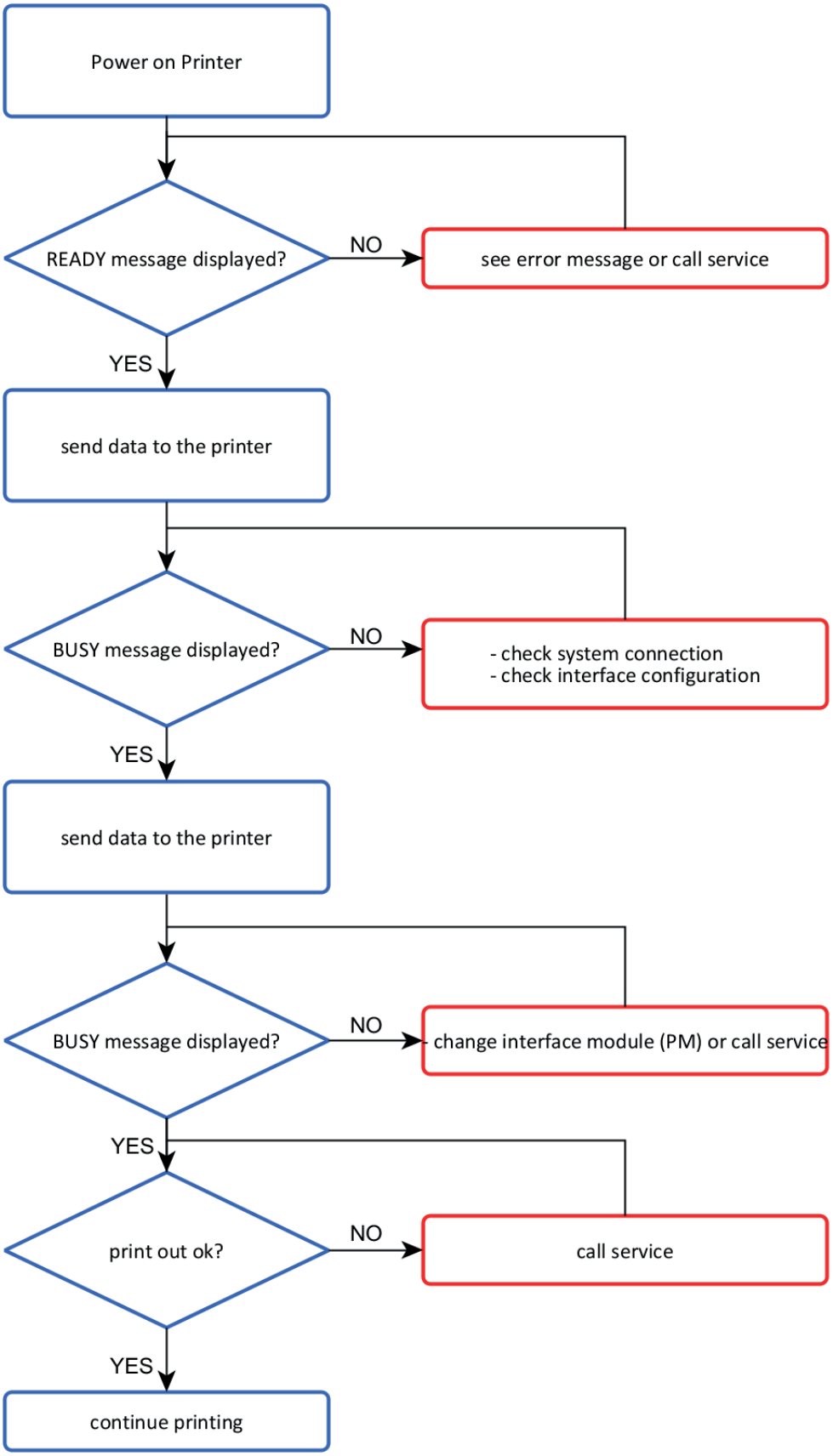

6.3.4 Bad print image or of poor quality

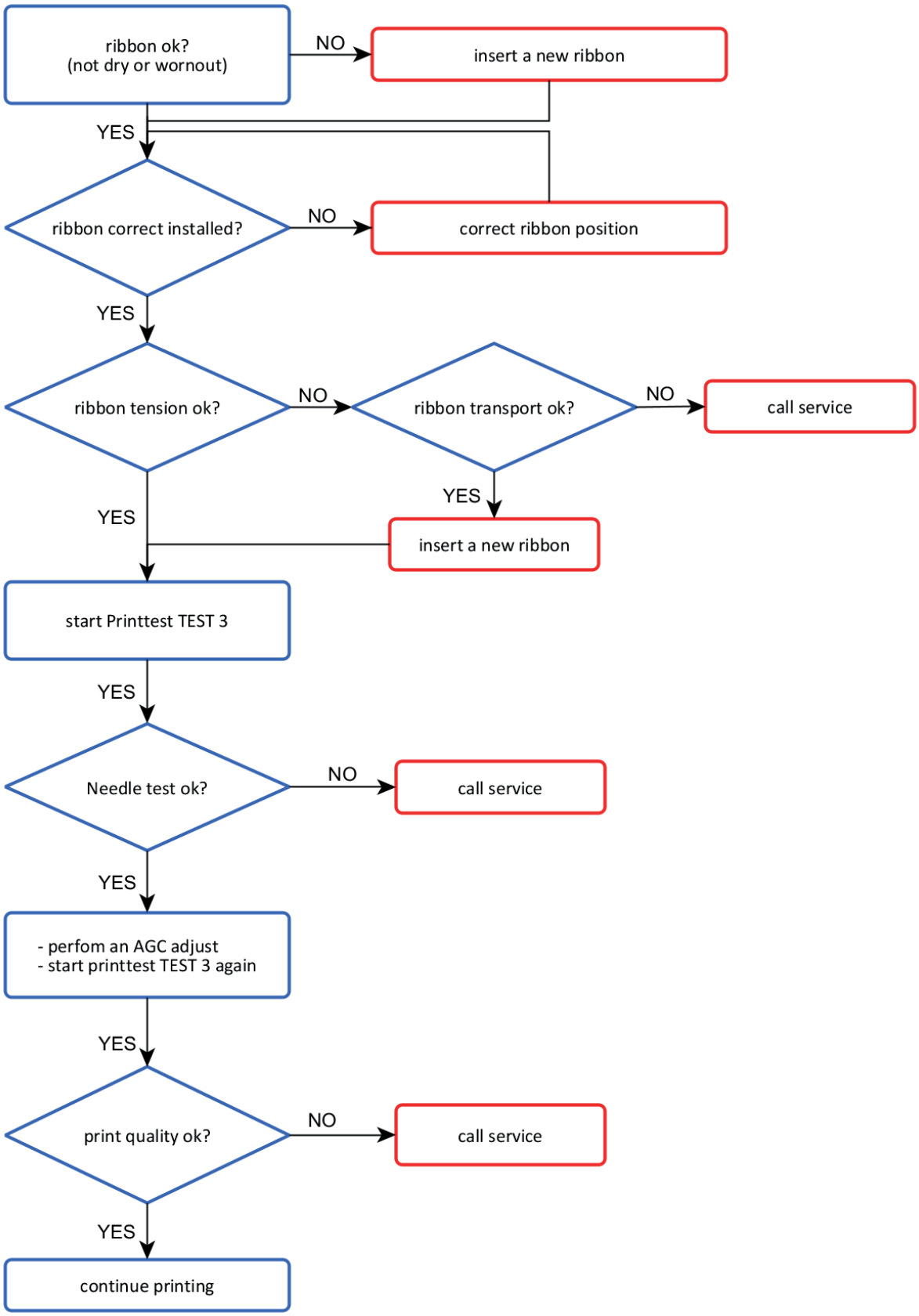

7. Option

7.1 ASF Cassettes

7.1.1 Checking the Delivery Consignment

Automatic Sheet Feeder Cassettes (ASF)

The printer can be operated with up to three ASF cassettes. The delivery comprises following parts:

- ASF Cassette (1)
- Paper support (2)

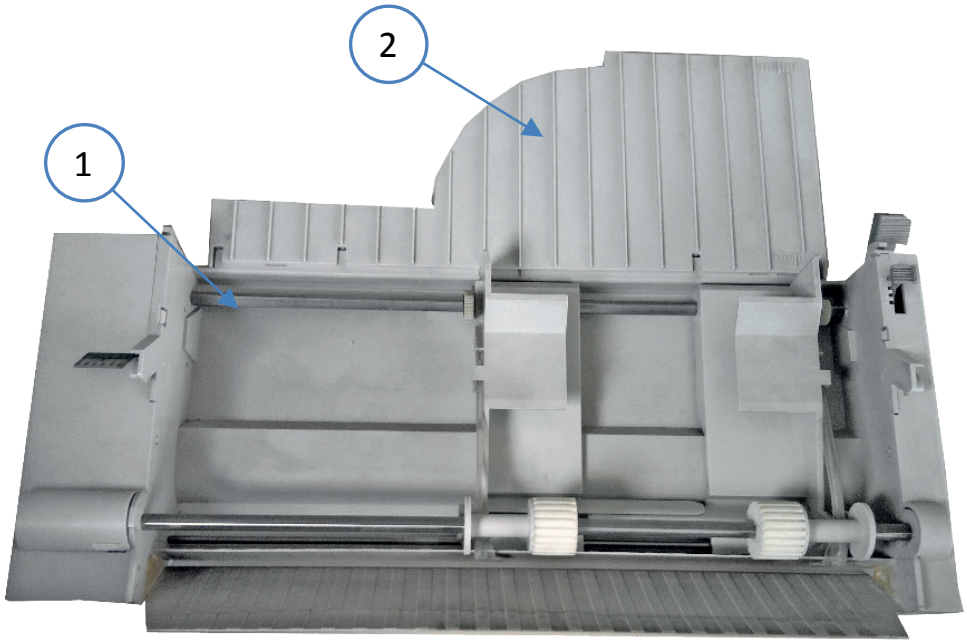

Three different types of ASF cassettes are available.

- Type A for regular paper and form sets
- Type B for thick paper types, heavy form sets, and envelopes (A sticker with an envelope indicates the ASF cassette B)
- Type C special Paper like folders)

Typ **A**

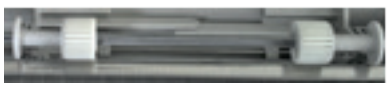

Typ **B**

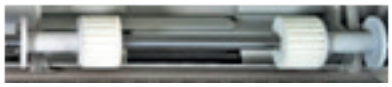

Typ **C**

7.1.2 Prepare the ASF Cassettes

- Mount the paper support (2) onto the cassette

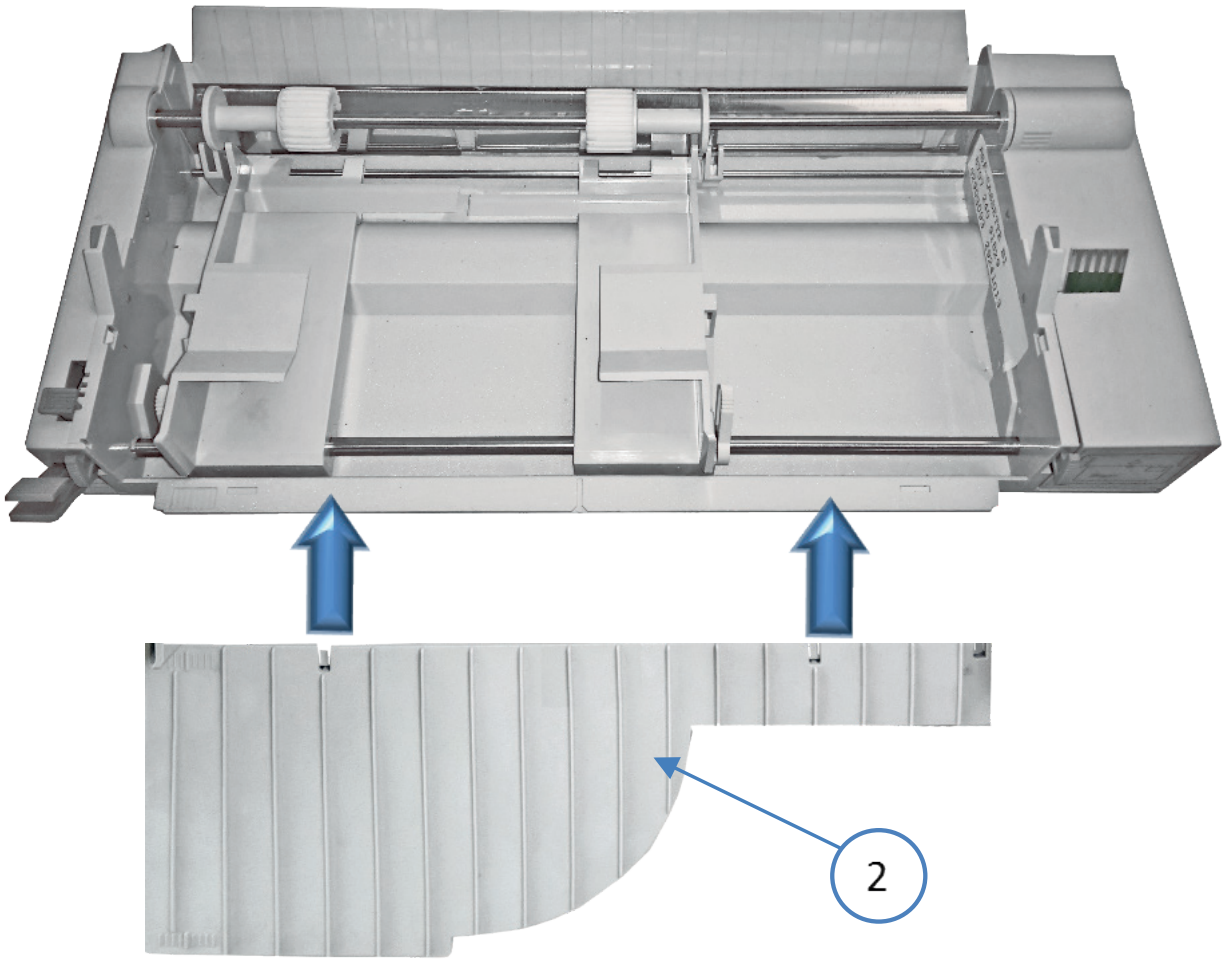

7.1.3 Installing the ASF Cassettes

Remove front cover (4)

Push the tabs (1) of the cassette into the slots (3) of the printer or of another ASF cassette until they engage.

Note: Be careful not to damage the contacts (2) of the cassette while installing.

- Up to three ASF cassettes can be installed at any time to enable processing of different paper types and formats simultaneously.
- A mix between Cassette type A, B and C is possible

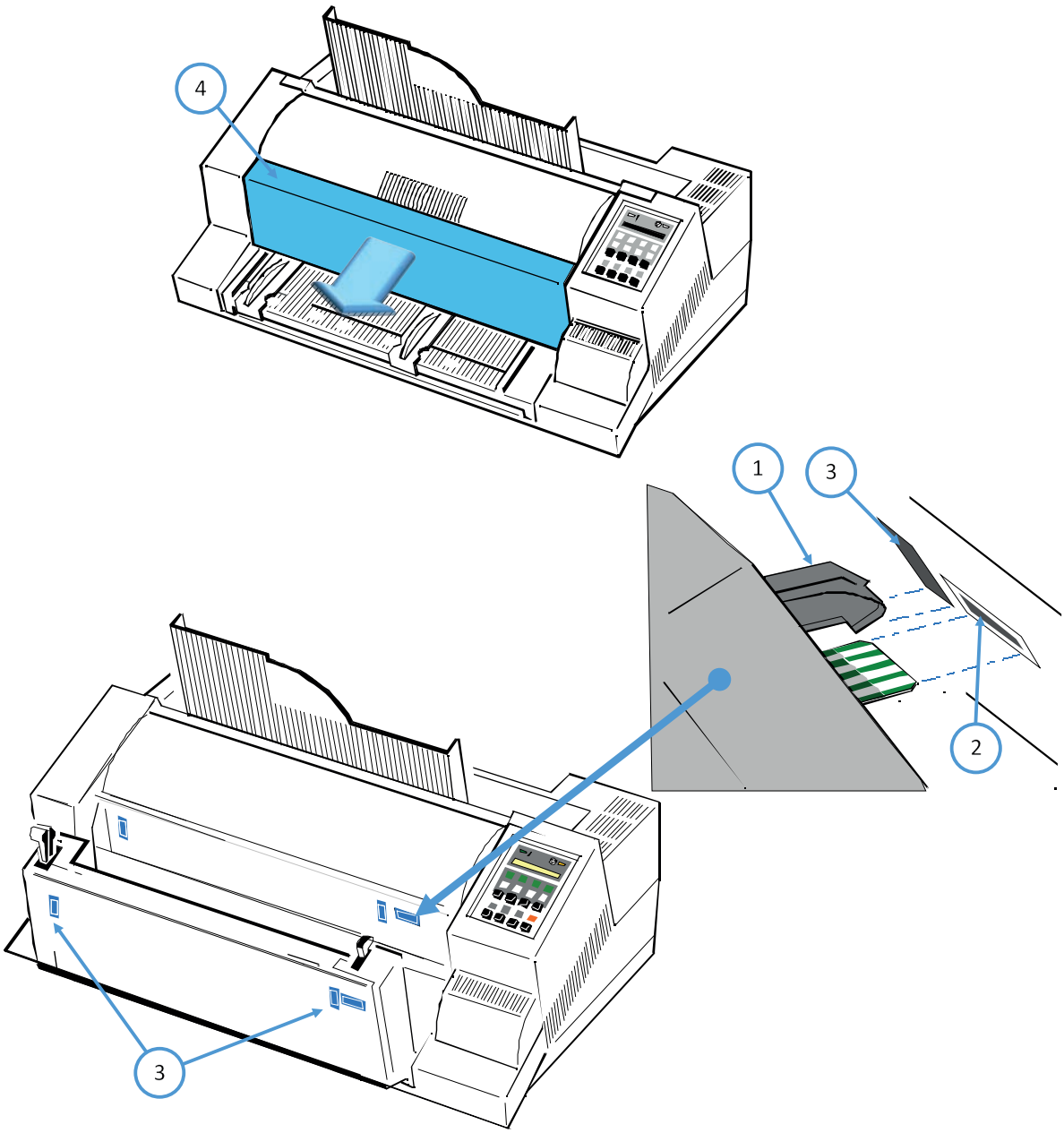

The position of each cassette is dependent on the paper length to be processed. The cassette with the shortest paper needs to be mounted first because the distance between the pick-up rollers of the cassette and the push rollers inside the printer is the shortest at position ‚1'. For example, if envelopes are to be processed, so mount cassette type B into cassette position (1)

Cassette Position	Minimum Paper Length
1 (first mounted)	104 mm (4,08 “)
2	200 mm (7.87 “)
3 (last mounted)	290 mm (11.42 “)

Note: For detail descriptions see chapter 8 Technical Data

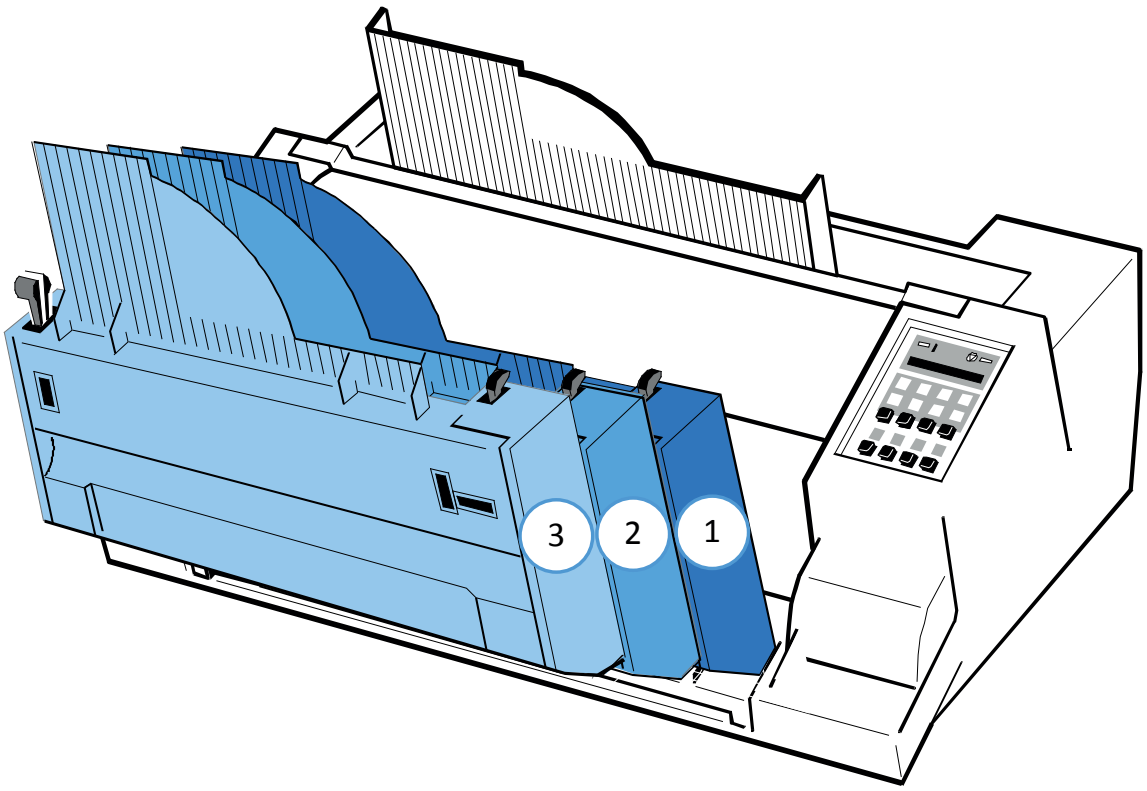

7.1.4 Removing the ASF Cassette

Remove the ASF cassette (1) from the printer by draw backwards both release levers (2).

Note: To remove all ASF cassettes together release only the ASF cassette in position 1. If the ASF cassettes shall be removed individually, so start the removal procedure with the last mounted ASF cassette.

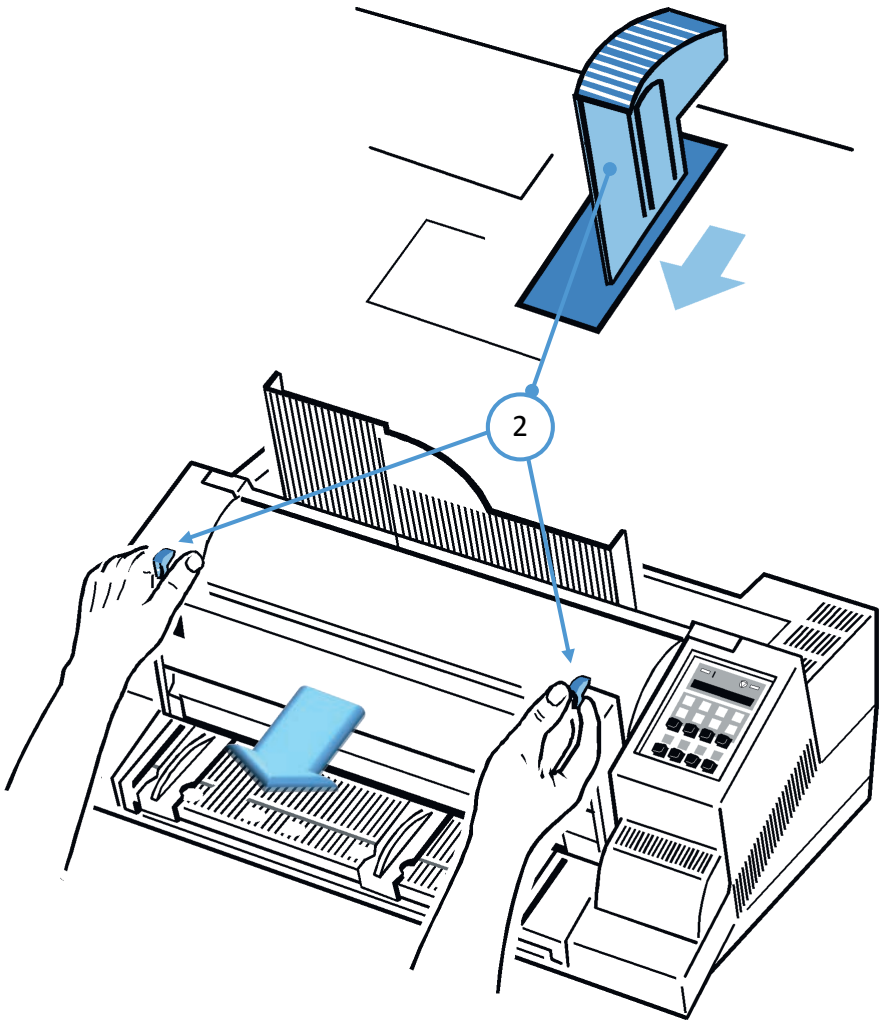

7.1.5 Insert Paper

The ASF cassette A can be loaded with up to 180 sheets of 80g/m² (21 lb/ream) paper. Cassette B can be loaded with up to 40 envelopes.

Paper that is intended for use with an ASF cassette must be unpacked and acclimatized within the printer environment for at least 24 hours prior to loading. When loading paper for the first time or changing to another format, the ASF cassette needs to be adapted to the paper size used. This can be done with the ASF attached to the printer.

- Squeeze the ASF cassette's levers (2) together, until the cassette automatically opens its load position.
- If required pull up and release the locking levers (1) and adjust the paper guides (3) to the width of the paper to be loaded.
- Align the left-hand edge of the paper with the center marker of the alignment scale (4)

Note: Aligning the edge of the paper with any of the other markers, left or right,

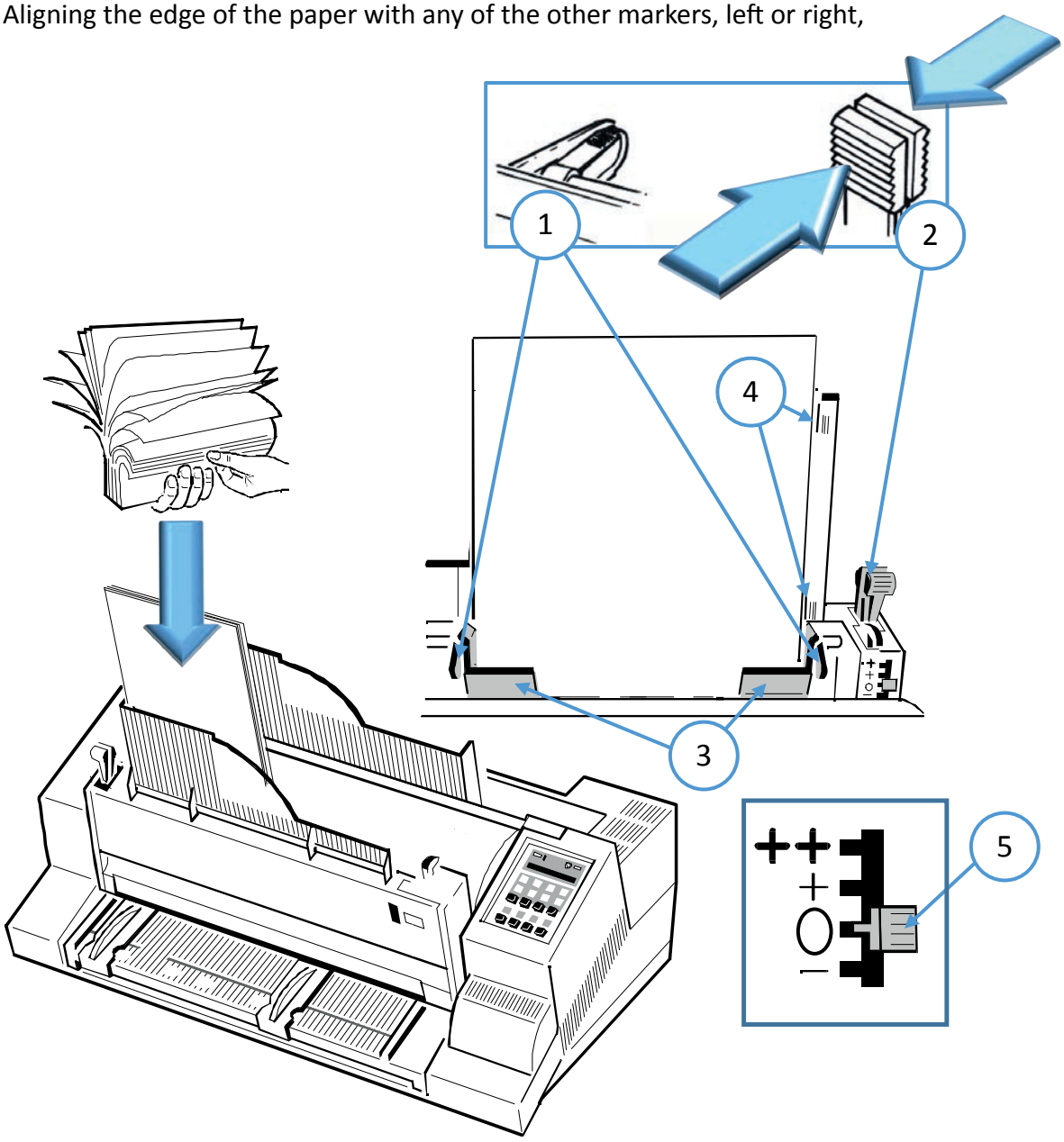

Note: The pressure applied to the separator rollers for the sheet / document feeder can be increased (+ / ++ position) or reduced (- position) by the pressure lever (5) with the shaft lever (2) released. This is z. For example, if paper below or above 80 gsm is used.

7.1.6 Replacement of the ASF Pick-up Rollers

The ASF pick-up rollers (1) have an expected life time of approximately 200,000 pages.

To Remove the ASF Pick-up Rollers

- Remove the ASF cassette
- Remove the small cover plate (5) by squeezing it as shown.
- Pull back the retainers (7) as shown and lift the shaft (4) (step 1).
- Pull the shaft (4) out of the cassette (step 2) and slide the pick-up rollers (3) off the shaft (4).

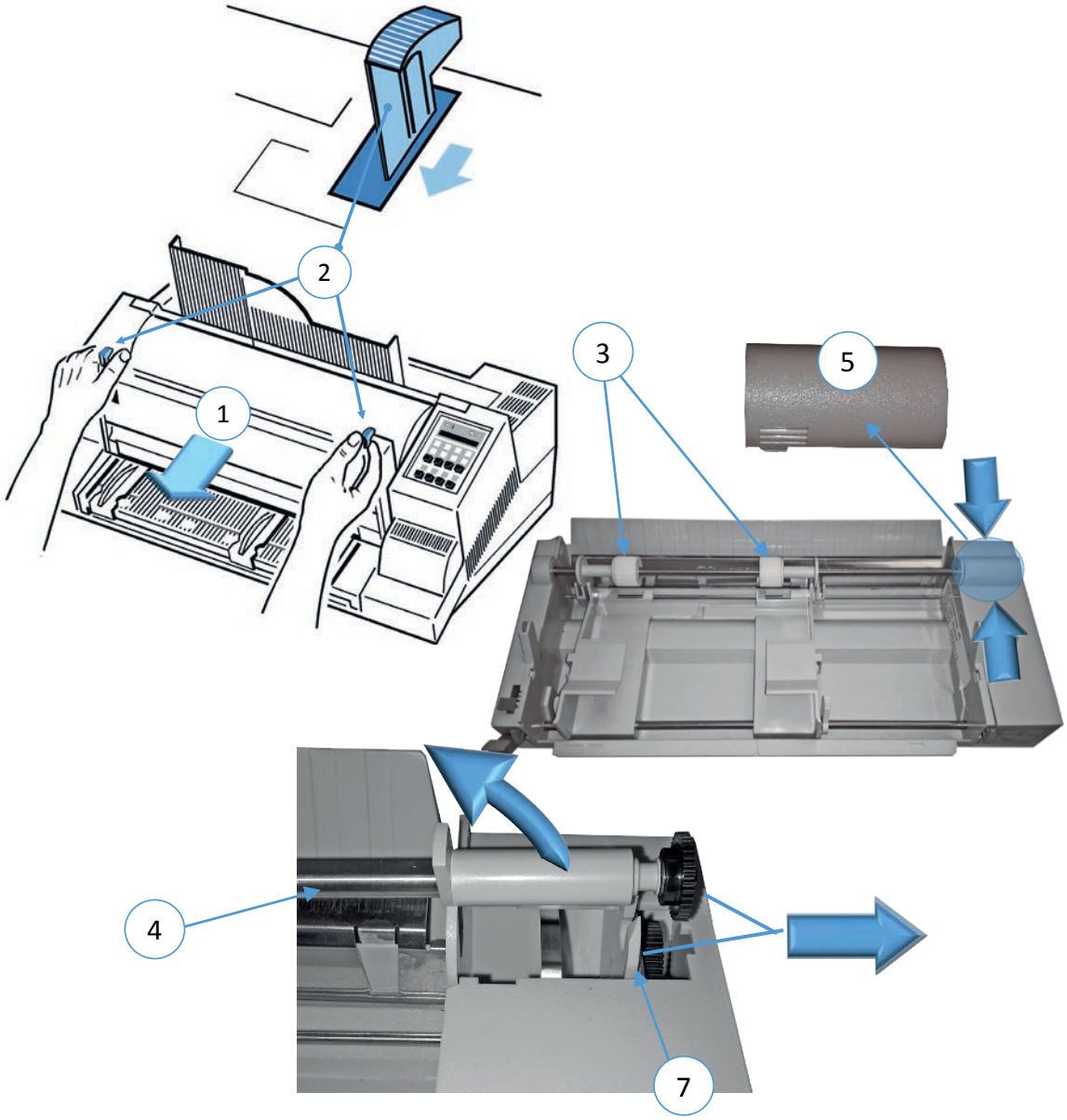

Install the Pick-up Rollers

- Slide the new pick-up rollers (3) onto the shaft (4).
- Insert the free end of the shaft (4) into the mounting (6), ensuring that each roller flange (5) is positioned so that they join with the indicated slots.
- Carefully snap the shaft (4) into its mounting (7) and fit the small cover plate (2).n.

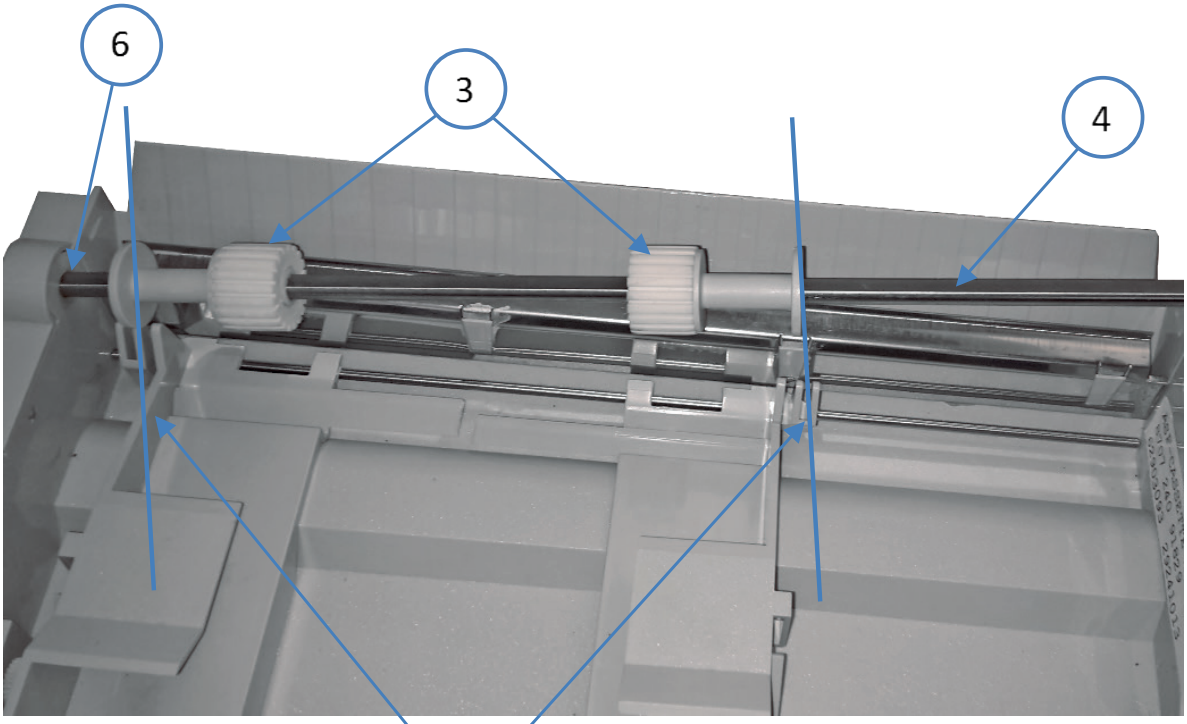

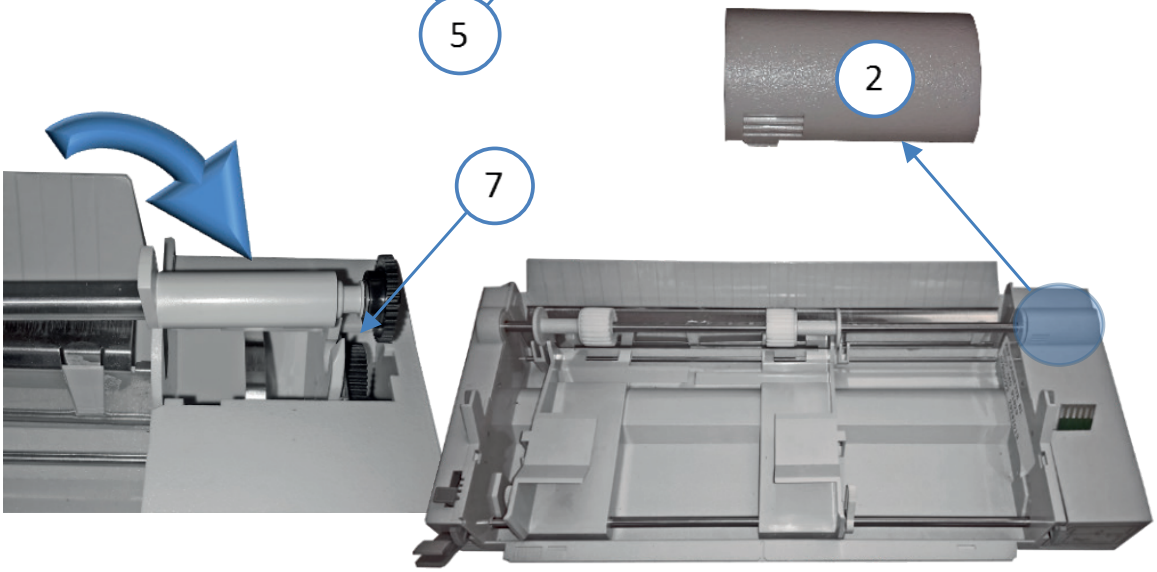

8. Technical Data

	CONTINUOUS PRINTER	CONTINUOUS PRINTER w. CUTTER
Printing technology	SIDM SERIAL Impact Dot Matrix Technologie	
Paper path	Flatbed technology	
Print head	24 needles, needle diameter 0.25 mm, life time Over 400 million characters, equivalent to about 350,000 pages (DIN standard letter).	
FONTS	Data, Roman, San Serif, Courier, Prestige, Script, OCR B, OCR A, Orator-C, Orator, DATA LARGE; All Fonts (not Data und DATA LARGE) in Letter quality(LQ) and near letter quality (NLQ). OCR A, OCR B only in LQ printable.	
Character attributes	Bold, italic, large, shadow, outline, underlined, double underlined, stroke, stroke, up / down, 2- to 8-fold height, 2- to 8-fold width, for Date Large to 99x height and width.	
Pitch	Standard character spacing is; 10, 12, 15, 17.1, 18, 20 characters / inch and proportional. In addition, commands can be defined with which other character spacing is selected. Characters can also be printed overlapping. If you select a smaller character spacing, the fonts will be compressed.	
Line space	2, 3, 4, 6, 8, 12 n/360 LINES/INCH	
Macros	Up to four different printer configurations can be controlled via the control panel or the software.	
Emulaton	IBM® ProPrinter XL24 (AGM) EPSON® LQ 2550/1060 / ESC/P2	
Print speed at 10 characters/Inch *) depending on the font		
Draft: DQ **Near letter qual. NLQ** **Letter qual. LQ**	500 cps 250 cps 125 cps *)	600 cps 300 cps 150 cps *)
Print volume	20.000 Seiten per month	
Character sets	**Code Pages EE**: 437 GK, 851 GK, 928 GK, 855 CYRI, 852, 866, 869, Kamenicky, ISO Latin 2, Mazovia, 437 HUN, 852 SEE, 866 LAT, WIN LAT 2. **Code Pages EE2:** 771, 773, 774, 775, Baltic RIM, 1125, Ukraine (866 U), 1251 Win Cyrillic. **IBM** Character Set 1 / 2 incl. 13 country versions **IBM Code Page** 437, 850, 857, 858, 860, 863, 865. **EPSON** Extended Graphic Character Set incl. 13 country versions. **ISO 8859** -1,-15, -5 and -9	

	CONTINUOUS PRINTER	CONTINUOUS PRINTER w. CUTTER
Barcode	Code 39, 2 aus 5 industrial, 2 of 5 interleaved, Codabar (Monarch), EAN 8, EAN 13, Code 39, Code 93, MSI Mod 10/10, UPC-E, UPC-A, Code 128 (inkl.EAN 128), Postnet and and KIX code all in horizontal and vertical position (see Appendix F Barcode Quick Reference)	
Graphic	Uni-/bi-directional (selectable) Max. resolution (V x H). 180 x 360: single 360 x 360: double (Dots/Inch)	
Graphic Quality	Standard WIN.LQ 180 Dots/Inch Win.NLQ 90 Dots/Inch Win.Draft 60 Dots/Inch	
Print width	136 haracters at 10 characters/Inch	
Print matrix	• 24 x 36 fr letter quality(LQ) • 12 x 36 fr near letter quality (NLQ) • 12 x 12 for draft (DRAFT) • 12 x 10 for fast design font font (HSD)	
Print gap control	Automatic gap control (AGC) messurment to the platen as a function of paper thickness control also programmable gap contorl (PCC) is possible.	
Ribbon	Black textile ribbon for up to 16 million characters standard. An XXL version with up to 40 million characters is available.	
Copies	1 original + 5 copies (maximum thickness of the form set: 0.5 mm)	
Standard Interface	Parallel IEEE 1284 /Centronics ® kompatibel SERIAL RS-232C/V.24 / USB	Variable! Must be ordered separately
Buffer	1 KByte up to 160 KByte, selectable.	
Operator panel	16-digit LCD for menu-driven setup, status and error messages; Display in German, English, French and Turkish.	
Diagnostic	• Selftest and Hex Dump.	
Dimensions • Width (W) • Depth (D) • Hight (H)	(W) 635 mm; 25.4 inch (D) 390 mm; 15.6 inch (H) 273 mm; 10,9 inch	(W) 635 mm; 25.4 inch (D) 390 mm; 15,6 inch (415 mm with all three ASF-cassettes) (H) 273 mm; 10,9 inch without stacker, 400 mm; 16 inch with all three ASF-cassettes
Weight	20,7 kg	23 kg
Rated voltage	100 - 120 / 200 - 240 V AC at nominal frequency = 50 - 60 Hz	
Power consumption • **operating** • **idle state**	 200 W < 40 W	

	CONTINUOUS PRINTER	CONTINUOUS PRINTER w. CUTTER
Ambient temperature • operating • storage	 +10°C to +35°C - 40°C to +70°C	
Relative humidity • operating • storage	20% to 80% 5% to 85%	20% up to 80% / 30% up to 70% (with ASF cassettes) 5% up to 85%
Noice level	# 53 dB (A) according to ISO 7779 (Sound pressure level 1 meter away from the housing)	# 52 dB (A) according to ISO 7779 (Sound pressure level 1 meter away from the housing)
Mean failure distance (MTBF)	10,000 hours at 25% duty cycle	
Approvals	VDE/GS, UL, C-UL, CE, FCC-B	
Printer Stand as an option for optimal paper guidance		
• Width (W) • Depth (D) • Hight (H) • Gewicht: (G)	600 mm x 740 mm x 720 mm, 16 Kg (WxDxH and G) 23,6 inch x 29,1 inch x 28,3 inch, 16 Kg (WxDxH and G)	
Paper processing	• Flatbed design • Tractor drawers with parking and tear-off position. • The paper paths can be selected by software or control panel	• Flatbed technology. • Integrated push tractor with park position for continuous paper, with zero tear off. • Three paper output positions. • Manual front insertion with face down stacker (360 sheet capacity, 80g/m²) Paper width max 15“. • Automatic Paper(form set) • and envelope feeder with up to three selectable cassettes for max. A4-Form-Format All paper paths are selectable via operator panel or software.
Continuous forms suitable for the tractor feeder (1 original + 5 copies)		
	Minimum	**Maximum**
Paper width	101,6 mm (4“)	400,0 mm (16“)
Paper length	76,2 mm (3“)	558,8 mm (22“)

	CONTINUOUS PRINTER	CONTINUOUS PRINTER w. CUTTER
Paper drive speed	11 Inch / Second	
Paper flow control	for operatorless printing operation	
Paper weight • **ply** • **multilayered (per sheet)** • **Total set of forms** • **max thickness**	**Minimum** **Maximum** 60 g/m^2; 16 lb./ream 90 g/m^2; 24 lb./ream 40 g/m^2; 10 lb./ream 60 g/m^2; 16 lb./ream 350 g/m^2; 93 lb./ream 0,5 mm; 0.02 inch	
Manual Insertion (fibrous direction = cross to the paper path) • Output	Option manual insertion (front side) to the front side	Standard manual insertion (front side or from the ASF cassettes) front side or output stacker to the top
• Paper Width: • Paper Length: • Paper Weight: • Blatt • Form set Total Paper / Form Thickness	105 mm; 4,13“ up to 305 mm; 12“ 100 mm; 3,94“ up to 420 mm; 16,54“ 60 g/m2; 16 lb./ream up to 160 g/m2; 42 lb./ream 60 g/m2; 16 lb./ream up to 350 g/m2 93 lb./ream 60 g/m2; 16 lb./ream up to 350 g/m2 93 lb./ream 0,5 mm; 0.02“ (top glued, original + 5 copies maximum) (minimum 60 g/m² per sheet)	
Output Stacker (top)		Capacity 360 sheets 80g/m²; 21 lb./ream; slackening face down.

Appendix A System Interface Description

(nur in englischer Sprache)

- Serial interface with RS-232C or RS-422 support
- Parallel Centronics interface.
- USB
- Ethernet

The interfaces can be operated in different modes:

USB
parallel interface active
parallel interface active in shared mode with serial RS-232C / USB /ETH
parallel interface active in shared mode with serial RS-422

The following chapter gives an overview about interface characteristics, control signals, protocols, and cabling.

Any change to the operation mode (PARALLEL, PARALL. / RS232, or PARALL. / RS422) and to the size of the interface buffer is possible only when the interface buffer is completely empty of data.

A 1 Serial Interface RS-232C / RS-422

A 1.1 Interface Characteristics

Signal Description RS-232C		Pin No.	Direction
PG	Protective Ground	1	-
TXD	Transmit Data (from printer to host)	2	OUTPUT
RXD	Receive Data (from host to printer)	3	INPUT
RTS	Request to Send (printer is requesting data transfer from host)	4	OUTPUT
CTS	Clear to Send (host is ready to receive data from printer)	5	INPUT
DSR	Data Set Ready (host is requesting data transfer from printer,can not be used for flow control, internaly set to "1")	6	INPUT
SG	Signal Ground	7	-
DTR	Data Terminal Ready (printer is ready to receive - see also on the following pages the data communication protocols for detail meaning	20	OUTPUT

Signal Description RS-422		Pin No.	Direction
PG	Protective Ground	1	-
RDA	Receive Data (from host to printer)	3	INPUT
SDA	Send Data (from printer to host)	9	OUTPUT
SDB	Not Send Data (from printer to host)	10	OUTPUT
RDB	Not Receive Data (from host to printer)	18	INPUT

Transmission rate: 600, 1200, 2400, 4800, 9600, or 19200 baud
Parity: even, odd, or none, Word length: 7, or 8 bits
Number of stop bits: In receive mode the printer accepts 1, or 2 stop bits. The printer transmits always two bits.

Transmission Protocols:

- DTR - Ready/Busy (only RS-232C)
- XON/XOFF
- XON/XOFF + DTR (only RS-232C)

A1.2 Serial Interface with RS-232C

Transmission Protocols:

- DTR - Ready/Busy (only RS-232C)
- XON/XOFF
- XON/XOFF + DTR (only RS-232C)

Transmission Protocols and Connection Diagrams

DTR - Ready/Busy (Supported RS-232C Protocols) - Full Duplex Local Connection

This protocol uses the following signal lines:

Pin	
1	Protective Ground (PG)
2	Transmit Data (TXD)
3	Receive Data (RXD)
5	Clear to Send (CTS)
6	Signal Ground (SG)
20	Data Terminal Ready (DTR)

Note: The signal lines TXD (pin 2) and CTS (pin 5) are only necessary if the Device Status Report is required.

The READY / BUSY DTR protocol uses the DATA TERMINAL READY (DTR) line to control the transmission of data from the host to prevent a buffer overflow.

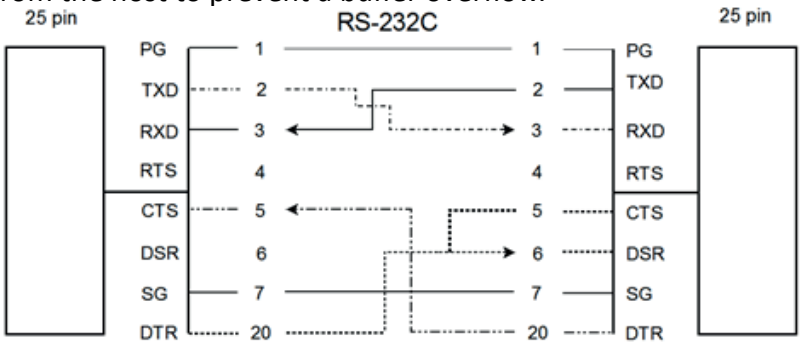

Note: Printer DTR may be connected to host DSR + CTS or only to host DSR and a bridge between RTS and CTS

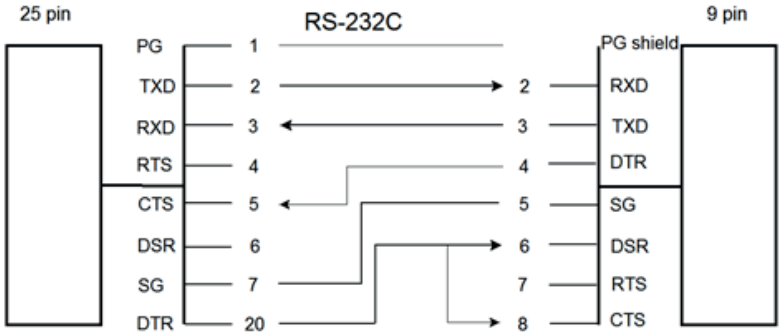

Note: Printer DTR may be connected to host DSR + CTS or only to host DSR and a bridge between RTS and CTS

Additional Information
After Power-ON DTR is activated and the printer is ready to receive data.

DTR is deactivated when the interface buffer has only space left for 256 more characters. Further incoming data will be stored until the interface buffer is full. All data sent in addition will get lost. DTR is activated again if there is a free interface buffer space of 512 characters.

DTR is immediately deactivated, if local mode is entered.

It is activated again, if local mode is left and a minimum of 512 bytes interface buffer is available.

XON/XOFF

This protocol requires all signal lines.

Pin		Pin	
1	Protective Ground (PG)	4	Request to Send (RTS)
2	Transmit Data (TXD)	5	Clear to Send (CTS)
3	Receive Data (RXD)	6	Data Set Ready (DSR)
7	Signal Ground (SG)	20	Data Terminal Ready (DTR)

Standard Connection

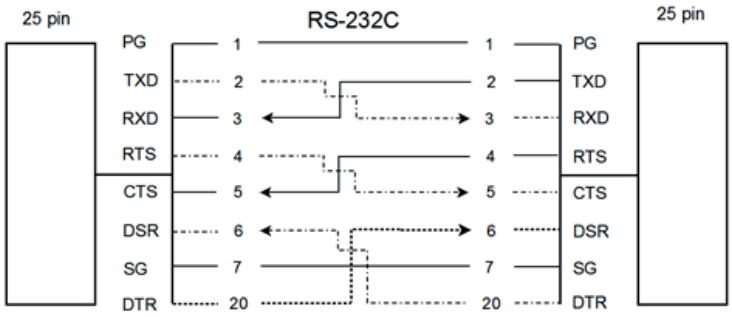

For local connections **RTS** with **CTS** can be connected and likewise **DTR** with **DSR**

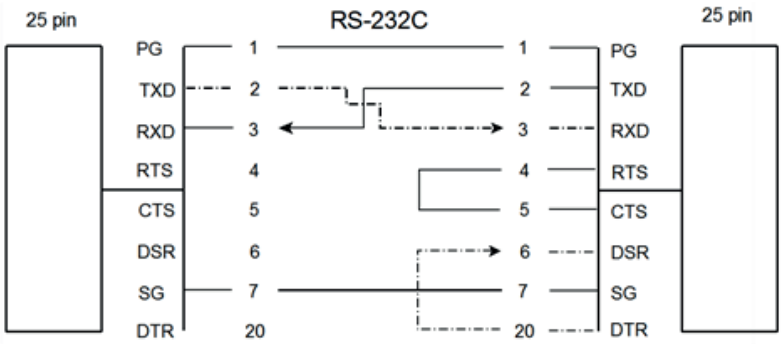

Additional Information
After Power-ON DTR and RTS are activated and the printer is ready to receive data.

XOFF is sent, when the interface buffer has only space left for 256 more characters. **XOFF** is sent again, at a level of 128 characters buffer space. Further incoming data will be stored until the interface buffer is full. All data sent in addition will get lost.

XON is sent when the interface buffer provides space for a minimum of 512 characters.

XON/XOFF can only be sent successfully when **CTS** is at active state.
When the CTS Mode is set to "CTS ignore" CTS is allways in the active state.

XOFF will be sent immediately if local mode is entered.

XON is sent again, if local mode is left and a minimum of 512 byte interface buffer is available.

A 1.3 Serial Interface with RS-422

This interface type requires the signal lines.

Pin	
1	Protective Ground (PG)
3	Receive Data (RDA)
9	Send Data (SDA)
10	Not Send Data (SDB)
18	Not Receive Data (RDB)

Standard Connection:

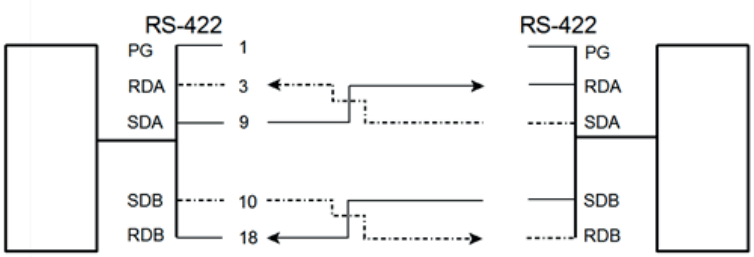

Note: Protective ground (PG) connected either to host **or** printer

A 2 Parallel Centronics® Interface

A 2.1 Interface Characteristics - Connector Pin Assignment / Signal

Signal Description		Pin No.	Return line Pin No.	Direction
_____ STROBE **)	Control Signal from the Host. Printer reads data line (Data 1 to Data 8) when going low.	1	19	Input
Data 1 - 8	Data lines transfer the characters from the host to the printer. Data 8 = most significant bit.	2 - 9	20 - 27	Input
ACKN *)	Acknowledge - Negative going pulse from the printer indicates that the printer has received a character and is ready for the next data transfer.	10	28	Output
BUSY	Control signal from the printer. A high level indicates that the printer is unable to receive any more data. **)	11	29	Output
PE	Paper Empty - Control signal from the printer. This signal goes high when paper runs out, i.e. load upper or lower tractor, paper jam.	12	--	Output
SELECT	Control signal from the printer. A high level indicates that the printer is **ON-LINE** and ready.	13	--	Output
LG	Logic Ground	14	--	
--	not used	15	--	
LG	Logic Ground	16	--	
CG	Chassis Ground	17	--	
VCC	+ 5 volt	18	--	
SG	Signal Ground	19 - 20	--	
INIT *)	Control signal from the host. Does not reset the prin- ter.	31	--	Input
____ FAULT *)	Control signal from the printer. A low level indicates that the printer has been switched off, or the serial interface is active.	32	--	Output
LG	Logic Ground	33	--	
--	not used	34 - 35	--	
SELECT IN	Compatible mode (low) 1284 nibble mode (high)	36	30	Input

*) Overlined signal names indicate that the signal is true when the signal level is low.

**) When the interface buffer is full except for the last character, BUSY will not be reset. BUSY will be reset when buffer space is available again for least 512 characters in the interface buffer. While the printer is offline (Stop Mode) BUSY remains active until the printer enters the online state again.

IEEE Std 1284 Nibble mode including Device ID are supported.

The maximum throughput for data transfer is 42,000 characters per second.

Transmission Protocol

After Power-ON the PE (Paper Empty) signal is set to low level and the SELECT and the FAULT are set to high level.
The printer is now ON-LINE and ready to receive data.

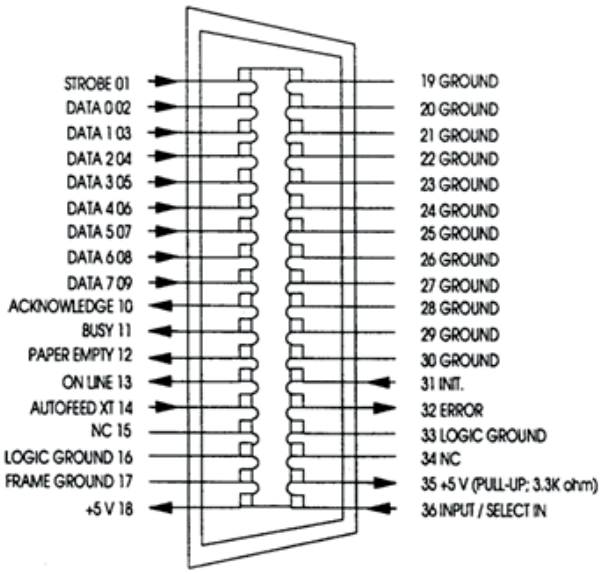

Timing
The host sets a print/control character to the 8 data lines.

After a time delay of a minimum of 0.5 µs, the host sends a STROBE pulse of a minimum of 0.5 µs. When the data byte is accepted into the interface buffer the printer transmits a BUSY signal and an ACKN pulse.

The ACKN pulse informs the host that the data has been received and that the printer is ready to receive new data. If the interface buffer is full except for the last character the BUSY is not reset in order to stop the data transfer from the host. The BUSY signal is only reset if space is available in the interface buffer for a minimum of 512 characters.
While the printer is offline, or a serial interface is active BUSY remains high and no ACKN is sent until the printer enters online state or the serial interface is deselected.

Timing Diagram

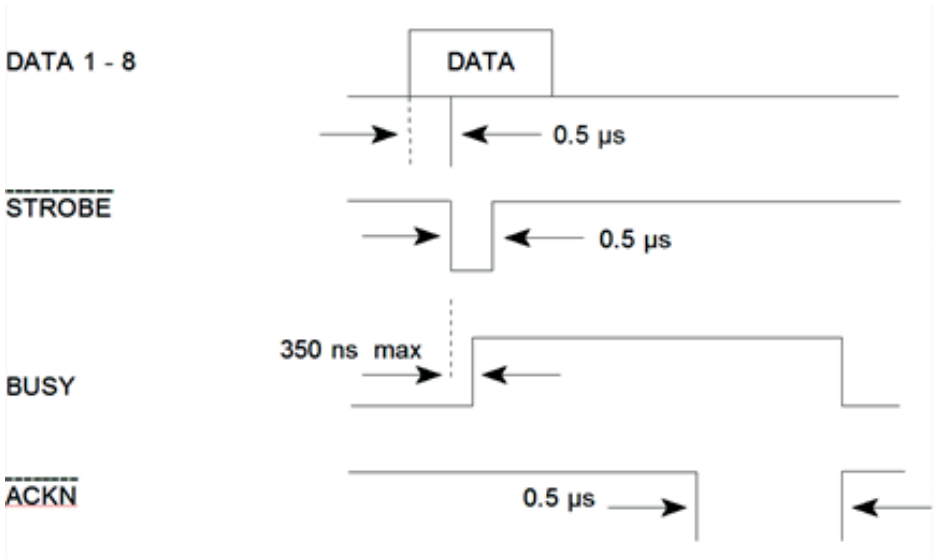

USB INTERFACE

- Reference standard: Universal Serial Bus
- Transmissions speed: 12 Mbps
- USB-Connector: Type **B**
- USB 2.0 compatible

Shared Mode

In shared operation the interface buffer capacity is reduced by 256 bytes.

- After Power-ON both the serial and the parallel interfaces are available for data transfer.
- If a byte is first recognized by the serial interface the parallel interface is imme- diately disabled by the **BUSY** signal. The serial interface is now active and will operate, using theinstalled protocols.
- If a byte is first recognized by the parallel interface either the **DTR** signal of the serial interface is set to **OFF** or **XOFF** is sent, depending on the protocol.
- If the serial interface starts to receive data while the parallel interface is active, it is possible to receive 256 bytes of serial data. Any additional serial data will be lost.
- When the interface buffer is completely empty of serial data, and no new data has been received by the serial interface for more than 10 seconds, both interfaces are available for data transfer again.
- When the interface buffer is completely empty of parallel data and no data has been received by the parallel interface for more than 60 seconds, the 256 bytes of serial data will be processed. Afterwards, both interfaces are available for data transfer again.

Additional Information for Serial Interface

After Power-ON DTR and RTS are activated and the printer is ready to receive data.

- **XOFF** is sent, when the interface buffer has only space left for 256 more charac- ters. **XOFF** is sent again, at a level of 128 characters buffer space. Further incoming data will be stored until the interface buffer is full. All data sent in addition will get lost.
- **XON** is sent when the interface buffer provides space for a minimum of 512 characters.
- **XON/XOFF** can only be sent successfully when **CTS** is at active state. When the CTS Mode is set to „CTS ignore“ CTS is always in the active state.
- **XOFF** will be sent immediately if local mode is entered.

XON is sent again, if local mode is left and a minimum of 512 byte interface buffer is available.

Appendix B Resident Fonts

(nur in englischer Sprache)

The Printer with the Personality Module (PM SER/PAR) provides the following resident fonts:

SCRIPT NLQ
SCRIPT LQ
OCR B LQ
OCR A LQ
ORATOR-C NLQ
ORATOR-C LQ
ORATOR NLQ
ORATOR LQ
DATA LARGE

Character Pitches

COURIER LQ, 20 CPI 0123456789ABCDEF

COURIER LQ, 18 CPI 0123456789ABCDEF

COURIER LQ, 17 CPI 0123456789ABCDEF

COURIER LQ, 15 CPI 0123456789ABCDEF

COURIER LQ, 12 CPI 0123456789ABCDEF

COURIER LQ, 10 CPI 0123456789ABC

COURIER LQ, proport. 0123456789ABCDEF

Character Attributes

COURIER outline

COURIER shadow

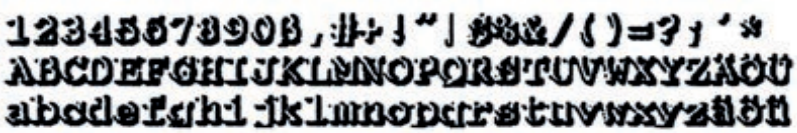

COURIER outline + shadow

COURIER

4xHeight 4xWidth outline

COURIER

4xHeight 4xWidth shadow

COURIER

4xHeight 4xWidth shadow + outline

COURIER LQ, 10 CPI

0123456789ABCDEF

COURIER LQ, 1x HEIGHT 2x WIDTH

0123456789ABCDEF

COURIER LQ, 1x HEIGHT 3x WIDTH

01234ABCDEF

COURIER LQ, 1x HEIGHT 4x WIDTH

01234ABC

COURIER LQ, 1x HEIGHT 4x WIDTH, BOLD

01234ABC

COURIER LQ, 2x HEIGHT 1x WIDTH

0123456789ABCDEF

COURIER LQ, 3x HEIGHT 1x WIDTH

0123456789ABCDEF

COURIER LQ, 4x HEIGHT 1x WIDTH

0123456789ABCDEF

COURIER LQ, 4x HEIGHT 1x WIDTH, BOLD

0123456789ABCDEF

COURIER LQ, 2x HEIGHT 2x WIDTH

0123456789ABCDEF

COURIER LQ, 3x HEIGHT 3x WIDTH

01234ABCDEF

COURIER LQ, 4x HEIGHT 4x WIDTH

01234ABC

COURIER LQ, 4x HEIGHT 4x WIDTH, BOLD

01234ABC

Appendix C Character Set Tables

C 1. ISO-Code Tables

Code Table ISO 8859-1

	2	3	4	5	6	7		A	B	C	D	E	F
0		0	@	P	`	p			°	À	Đ	à	ð
1	!	1	A	Q	a	q		¡	±	Á	Ñ	á	ñ
2	"	2	B	R	b	r		¢	²	Â	Ò	â	ò
3	#	3	C	S	c	s		£	³	Ã	Ó	ã	ó
4	$	4	D	T	d	t		¤	'	Ä	Ô	ä	ô
5	%	5	E	U	e	u		¥	µ	Å	Õ	å	õ
6	&	6	F	V	f	v		|	¶	Æ	Ö	æ	ö
7	*	7	G	W	g	w		§	·	Ç	×	ç	÷
8	(	8	H	X	h	x		(	¸	È	Ø	è	ø
9	)	9	I	Y	i	y		©	¹	É	Ù	é	ù
A	*	:	J	Z	j	z		a	o	Ê	Ú	ê	ú
B	+	;	K	[	k	{		«	»	Ë	Û	ë	û
C	'	<	L	\	l	|		¬	¼	Ì	Ü	ì	ü
D	-	=	M	]	m	}		–	½	Í	Ý	í	ý
E	.	>	N	^	n	~		®	¾	Î	Þ	î	þ
F	/	?	O	_	o			G	¿	Ï	ß	ï	ÿ

Code Table ISO 8859-15

	2	3	4	5	6	7		A	B	C	D	E	F
0		0	@	P	`	p			Ɛ	À	Đ	à	ð
1	!	1	A	Q	a	q		¡	±	Á	Ñ	á	ñ
2	‖	2	B	R	b	r		¢	²	Â	Ò	â	ò
3	#	3	C	S	c	s		£	³	Ã	Ó	ã	ó
4	$	4	D	T	d	t		€	Ž	Ä	Ô	ä	ô
5	%	5	E	U	e	u		¥	F	Å	Õ	å	õ
6	&	6	F	V	f	v		Š	¶	Æ	Ö	æ	ö
7	*	7	G	W	g	w		§	·	Ç	×	ç	÷
8	(	8	H	X	h	x		š	ž	È	Ø	è	ø
9	)	9	I	Y	i	y		©	¹	É	Ù	é	ù
A	*	:	J	Z	j	z		a	o	Ê	Ú	ê	ú
B	+	;	K	[	k	{		*	+	Ë	Û	ë	û
C	´	<	L	\	l	|		¬	Œ	Ì	Ü	ì	ü
D	-	=	M	]	m	}		–	œ	Í	Ý	í	ý
E	.	>	N	^	n	~		®	Ÿ	Î	Þ	î	þ
F	/	?	O	_	o			G	¿	Ï	ß	ï	ÿ

Code Table ISO 8859-5

	2	3	4	5	6	7		A	B	C	D	E	F
0		0	@	P	`	p			А	Р	а	р	№
1	!	1	A	Q	a	q		Ё	Б	С	б	с	ё
2	"	2	B	R	b	r		Ђ	В	Т	в	т	ъ
3	#	3	C	S	c	s		Ѓ	Г	У	г	у	ѓ
4	$	4	D	T	d	t		Є	Д	Ф	д	ф	є
5	%	5	E	U	e	u		S	Е	Х	е	х	s
6	&	6	F	V	f	v		І	Ж	Ц	ж	ц	і
7	*	7	G	W	g	w		Ї	З	Ч	з	ч	ї
8	(	8	H	X	h	x		J	И	Ш	и	ш	j
9	)	9	I	Y	i	y		Љ	Й	Щ	й	щ	љ
A	*	:	J	Z	j	z		Њ	К	Ъ	к	ъ	њ
B	+	;	K	[	k	{		Ћ	Л	Ы	л	ы	ћ
C	'	<	L	\	l	|		Ќ	М	Ь	м	ь	ќ
D	-	=	M	]	m	}			Н	Э	н	э	§
E	.	>	N	^	n	~		Ў	О	Ю	о	ю	ў
F	/	?	O	_	o			Џ	П	Я	п	я	

Code Table ISO 8859-9

	2	3	4	5	6	7		A	B	C	D	E	F
0		0	@	P	'	p			°	À	Ğ	à	ğ
1	!	1	A	Q	a	q		¡	±	Á	Ñ	á	ñ
2	1	2	B	R	b	r		¢	²	Â	Ò	â	ò
3	#	3	C	S	c	s		£	³	Ã	Ó	ã	ó
4	$	4	D	T	d	t		¤	'	Ä	Ô	ä	ô
5	%	5	E	U	e	u		¥	µ	Å	Õ	å	õ
6	&	6	F	V	f	v		¦	¶	Æ	Ö	æ	ö
7	*	7	G	W	g	w		§	!	Ç	×	ç	÷
8	(	8	H	X	h	x		(	2	È	Ø	è	ø
9	)	9	I	Y	i	y		©	¹	É	Ù	é	ù
A	*	:	J	Z	j	z		a	o	Ê	Ú	ê	ú
B	+	;	K	[	k	{		«	»	Ë	Û	ë	û
C	'	<	L	\	l	|		¬	¼	Ì	Ü	ì	ü
D	-	=	M	]	m	}		–	½	Í	İ	í	i
E	.	>	N	^	n	~		®	¾	Î	Ş	î	ş
F	/	?	O	_	o			–	¿	Ï	ß	ï	

C 2. IBM Code Pages

Code Table IBM All Character Set

	2	3	4	5	6	7		A	B	C	D	E	F
0		0	@	P	'	p			°	À	Ğ	à	ğ
1	!	1	A	Q	a	q		¡	±	Á	Ñ	á	ñ
2	1	2	B	R	b	r		¢	²	Â	Ò	â	ò
3	#	3	C	S	c	s		£	³	Ã	Ó	ã	ó
4	$	4	D	T	d	t		¤	'	Ä	Ô	ä	ô
5	%	5	E	U	e	u		¥	µ	Å	Õ	å	õ
6	&	6	F	V	f	v		¦	¶	Æ	Ö	æ	ö
7	*	7	G	W	g	w		§	!	Ç	×	ç	÷
8	(	8	H	X	h	x		(	2	È	Ø	è	ø
9	)	9	I	Y	i	y		©	¹	É	Ù	é	ù
A	*	:	J	Z	j	z		a	o	Ê	Ú	ê	ú
B	+	;	K	[	k	{		«	»	Ë	Û	ë	û
C	'	<	L	\	l	|		¬	¼	Ì	Ü	ì	ü
D	-	=	M	]	m	}		–	½	Í	İ	í	i
E	.	>	N	^	n	~		®	¾	Î	Ş	î	ş
F	/	?	O	_	o			–	¿	Ï	ß	ï	

Applicable for Code Table IBM Set 1 and 2

Code Table IBM SET 1

National Version = USA

	0	1	2	3	4	5	6	7	8	9	A	B	C	D	E	F
0	NUL		SP	0	@	P	`	p	NUL		á	▒	└	╨	α	≡
1		DC1	!	1	A	Q	a	q		DC1	í	▒	┴	╤	β	±
2		DC2	”	2	B	R	b	r		DC2	ó	▓	┬	╥	Γ	≥
3		DC3	#	3	C	S	c	s		DC3	ú	|	├	╙	π	≤
4		DC4	$	4	D	T	d	t		DC4	ñ	┤	–	╘	Σ	⌠
5			%	5	E	U	e	u			Ñ	╡	┼	╒	σ	⌡
6			&	6	F	V	f	v			ª	╢	╞	╓	µ	÷
7	BEL		’	7	G	W	g	w	BEL		º	╖	╟	╫	τ	≈
8	BS	CAN	(	8	H	X	h	x	BS	CAN	¿	╕	╚	╪	Φ	°
9	HT		)	9	I	Y	i	y	HT		⌐	╣	╔	┘	Θ	·
A	LF		*	:	J	Z	j	z	LF		¬	║	╩	┌	Ω	·
B	VT	ESC	+	;	K	[	k	{	VT	ESC	½	╗	╦	█	δ	√
C	FF		´	<	L	\	l	|	FF		¼	╝	╠	▄	∞	ⁿ
D	CR		-	=	M	]	m	}	CR		¡	╜	═	▌	ø	²
E	SO		.	>	N	^	n	~	SO		«	╛	╬	▐	ε	■
F	SI		/	?	O	_	o		SI		»	┐	╧	▀	∩	SP

Code Table IBM SET 1

National Versions

	Character Code (Hex)											
	23	**24**	**40**	**5B**	**5C**	**5D**	**5E**	**60**	**7B**	**7C**	**7D**	**7E**
1: USA	#	$	@	[	\	]	^	`	{	|	}	~
2: FRANCE	#	$	à	°	ç	§	^	`	é	ù	è	¨
3: GERMANY	#	$	§	Ä	Ö	Ü	^	`	ä	ö	ü	ß
4: U.K.	£	$	@	[	\	]	^	`	{	|	}	~
5: DENMARK	#	$	@	Æ	Ø	Å	^	`	æ	ø	å	~
6: SWEDEN	#	¤	É	Ä	Ö	Å	Ü	é	ä	ö	å	ü
7: ITALY	#	$	@	°	\	é	^	ù	à	ò	è	ì
8: SPAIN	Pts	$	@	¡	Ñ	¿	^	`	¨	ñ	}	~
9: JAPAN	#	$	@	[	¥	]	^	`	{	|	}	~
10: NORWAY	#	¤	É	Æ	Ø	Å	Ü	é	æ	ø	å	ü
11: DENMARK 2	#	$	É	Æ	Ø	Å	Ü	é	æ	ø	å	ü
12: SPAIN 2	#	$	á	¡	Ñ	¿	é	`	í	ñ	ó	ú
13: LATIN AM.	#	$	á	¡	Ñ	¿	é	Ü	í	ñ	ó	ú
14: TURKEY	#	ī	Ī	Ç	Ö	Ş	Ü	ğ	ç	ö	ş	ü

Code Table IBM SET 2

National Version = USA

	0	1	2	3	4	5	6	7	8	9	A	B	C	D	E	F
0	NUL		SP	0	@	P	`	p	Ç	É	á	▒	└	╨	α	≡
1		DC1	!	1	A	Q	a	q	ü	æ	í	▒	┴	╤	β	±
2		DC2	”	2	B	R	b	r	é	Æ	ó	▓	┬	╥	Γ	≥
3	♥	DC3	#	3	C	S	c	s	â	ô	ú	|	├	╙	π	≤
4	♦	DC4	$	4	D	T	d	t	ä	ö	ñ	┤	–	╘	Σ	⌠
5	♣	§	%	5	E	U	e	u	à	ò	Ñ	╡	┼	╒	σ	⌡
6	♠		&	6	F	V	f	v	å	û	ª	╢	╞	╓	µ	÷
7	BEL		’	7	G	W	g	w	ç	ù	º	╖	╟	╫	τ	≈
8	BS	CAN	(	8	H	X	h	x	ê	ÿ	¿	╕	╚	╪	Φ	°
9	HT		)	9	I	Y	i	y	ë	Ö	⌐	╣	╔	┘	Θ	·
A	LF		*	:	J	Z	j	z	è	Ü	¬	║	╩	┌	Ω	·
B	VT	ESC	+	;	K	[	k	{	ï	¢	½	╗	╦	█	δ	√
C	FF		´	<	L	\	l	|	î	£	¼	╝	╠	▄	∞	ⁿ
D	CR		-	=	M	]	m	}	ì	¥	¡	╜	═	▌	ø	²
E	SO		.	>	N	^	n	~	Ä	₧	«	╛	╬	▐	ε	■
F	SI		/	?	O	_	o		Å	ƒ	»	┐	╧	▀	∩	SP

Code Table IBM SET 2

National Versions

	Character Code (Hex)													
	23	**24**	**40**	**5B**	**5C**	**5D**	**5E**	**60**	**7B**	**7C**	**7D**	**7E**	**9B**	**9D**
1: USA	#	$	@	[	\	]	^	`	{	|	}	~	¢	¥
2: FRANCE	#	$	à	°	ç	§	^	`	é	ù	è	¨	¢	¥
3: GERMANY	#	$	§	Ä	Ö	Ü	^	`	ä	ö	ü	ß	¢	¥
4: U.K.	£	$	@	[	\	]	^	`	{	|	}	~	¢	¥
5: DENMARK	#	$	@	[	\	]	^	`	{	|	}	~	ø	Ø
6: SWEDEN	#	¤	É	Ä	Ö	Å	Ü	é	ä	ö	å	ü	¢	¥
7: ITALY	#	$	@	°	\	é	^	ù	à	ò	è	ì	¢	¥
8: SPAIN	Pts	$	@	¡	Ñ	¿	^	`	¨	ñ	}	~	¢	¥
9: JAPAN	#	$	@	[	¥	]	^	`	{	|	}	~	¢	¥
10: NORWAY	#	$	@	[	\	]	^	`	{	|	}	~	ø	Ø
11: DEMARK 2	#	$	@	[	\	]	^	`	{	|	}	~	ø	Ø
12: SPAIN 2	#	$	á	¡	Ñ	¿	é	`	í	ñ	ó	ú	¢	¥
13: LATIN AM.	#	$	á	¡	Ñ	¿	é	Ü	í	ñ	ó	ú	¢	¥
14: TURKEY	#	ī	Ī	Ç	Ö	Ş	Ü	ğ	ç	ö	ş	ü	¢	¥

C.3 Code Table IBM Code Page

Code Page	Countries
Code Page 437	• USA
Code Page 850	• Germany, • UK, • Denmark, • Sweden, • Italy, • Spain, • Japan, • Latin Am., • Turkey
Code Page 858	• Germany, • UK, • Denmark, • Sweden, • Italy, • Spain, • Japan, • Latin Am, • Turkey; inc. € Symbol
Code Page 860	• Portugal
Code Page 863	• Canada, • French
Code Page 865	• Norway
Code Page 857	• Turkey

	0	1	2	3	4	5	6	7	8	9	A	B	C	D	E	F
0	∅	▸	SP	0	@	P	`	p	Ç	É	á	▒	└	╨	α	≡
1	☺	◂	!	1	A	Q	a	q	ü	æ	í	▒	┴	╤	β	±
2	☻	↕	"	2	B	R	b	r	é	Æ	ó	▓	┬	╥	Γ	≥
3	♥	‼	#	3	C	S	c	s	â	ô	ú	│	├	╙	π	≤
4	♦	¶	$	4	D	T	d	t	ä	ö	ñ	┤	─	╘	Σ	⌠
5	♣	§	%	5	E	U	e	u	à	ò	Ñ	╡	┼	╒	σ	⌡
6	♠	_	&	6	F	V	f	v	å	û	ª	╢	╞	╓	µ	÷
7	●	↨	’	7	G	W	g	w	ç	ù	º	╖	╟	╫	τ	≈
8	◘	↑	(	8	H	X	h	x	ê	ÿ	¿	╕	╚	╪	Φ	°
9	○	↓	)	9	I	Y	i	y	ë	Ö	⌐	╣	╔	┘	Θ	·
A	◙	→	*	:	J	Z	j	z	è	Ü	¬	║	╩	┌	Ω	·
B	♂	←	+	;	K	[	k	{	ï	¢	½	╗	╦	█	δ	√
C	♀	∟	´	<	L	\	l	|	î	£	¼	╝	╠	▄	∞	ⁿ
D	♪	↔	-	=	M	]	m	}	ì	¥	¡	╜	═	▌	ø	²
E	♫	▲	.	>	N	^	n	~	Ä	Pts	«	╛	╬	▐	ε	■
F	☼	▼	/	?	O	_	o		Å	ƒ	»	┐	╧	▀	∩	SP

	0	1	2	3	4	5	6	7	8	9	A	B	C	D	E	F
0	ø	▸	SP	0	@	P	`	p	Ç	É	á	░	└	ð	Ó	-
1	☺	◂	!	1	A	Q	a	q	ü	æ	í	▒	┴	Ð	β	±
2	☻	↕	"	2	B	R	b	r	é	Æ	ó	▓	┬	Ê	Ô	=
3	♥	‼	#	3	C	S	c	s	â	ô	ú	│	├	Ë	Ò	¾
4	♦	¶	$	4	D	T	d	t	ä	ö	ñ	┤	─	È	õ	¶
5	♣	§	%	5	E	U	e	u	à	ò	Ñ	Á	┼	í	Õ	§
6	♠	_	&	6	F	V	f	v	å	û	ª	Â	ã	Í	µ	÷
7	•	↨	’	7	G	W	g	w	ç	ù	º	À	Ã	Î	þ	¸
8	◘	↑	(	8	H	X	h	x	ê	ÿ	¿	©	╚	Ï	Þ	ō
9	○	↓	)	9	I	Y	i	y	ë	Ö	®	╣	╔	┘	Ú	¨
A	◙	→	*	:	J	Z	j	z	è	Ü	¬	║	╩	┌	Û	°
B	♂	←	+	;	K	[	k	{	ï	ø	½	╗	╦	█	Ù	¹
C	♀	∟	´	<	L	\	l	|	î	£	¼	╝	╠	▄	ý	³
D	♪	↔	-	=	M	]	m	}	ì	Ø	¡	¢	═	|	Ý	²
E	♫	▲	.	>	N	^	n	~	Ä	×	«	¥	╬	ì	¯	■
F	☼	▼	/	?	O	_	o		Å	ƒ	»	┐	¤	■	'	SP

IBM Code Page 858

€ sign implemented on HEX D5

	0	1	2	3	4	5	6	7	8	9	A	B	C	D	E	F
0	ø	▸	SP	0	@	P	`	p	Ç	É	á	▒	└	ð	Ó	-
1	☺	◂	!	1	A	Q	a	q	ü	æ	í	▒	┴	Đ	β	±
2	☻	↕	"	2	B	R	b	r	é	Æ	ó	▓	┬	Ê	Ô	=
3	♥	‼	#	3	C	S	c	s	â	ô	ú	│	├	Ë	Ò	¾
4	♦	¶	$	4	D	T	d	t	ä	ö	ñ	┤	─	È	õ	¶
5	♣	§	%	5	E	U	e	u	à	ò	Ñ	Á	┼	€	Õ	§
6	♠	_	&	6	F	V	f	v	å	û	ª	Â	ã	Ī	µ	÷
7	•	↨	’	7	G	W	g	w	ç	ù	º	À	Ã	Î	þ	¸
8	◘	↑	(	8	H	X	h	x	ê	ÿ	¿	©	╚	Ï	Þ	˘
9	○	↓	)	9	I	Y	i	y	ë	Ö	®	╣	╔	┘	Ú	¨
A	◙	→	*	:	J	Z	j	z	è	Ü	¬	║	╩	┌	Û	°
B	♂	←	+	;	K	[	k	{	ï	ø	½	╗	╦	█	Ù	¹
C	♀	∟	´	<	L	\	l	|	î	£	¼	╝	╠	▄	ý	³
D	♪	↔	-	=	M	]	m	}	ì	Ø	¡	¢	═	|	Ý	²
E	♫	▲	.	>	N	^	n	~	Ä	×	«	¥	╬	ì	¯	■
F	☼	▼	/	?	O	_	o		Å	ƒ	»	┐	¤	■	'	SP

	0	1	2	3	4	5	6	7	8	9	A	B	C	D	E	F
0	ø	▸	SP	0	@	P	`	p	Ç	É	á	▒	└	╨	α	≡
1	☺	◂	!	1	A	Q	a	q	ü	À	í	▒	┴	╤	β	±
2	☻	↕	"	2	B	R	b	r	é	È	ó	▓	┬	╥	Γ	≥
3	♥	‼	#	3	C	S	c	s	â	ô	ú	│	├	╙	π	≤
4	♦	¶	$	4	D	T	d	t	ã	õ	ñ	┤	─	╘	Σ	⌠
5	♣	§	%	5	E	U	e	u	à	ò	Ñ	╡	┼	╒	σ	⌡
6	♠	_	&	6	F	V	f	v	Á	Ú	ª	╢	╞	╓	µ	÷
7	●	↨	’	7	G	W	g	w	ç	ù	º	╖	╟	╫	τ	≈
8	◘	↑	(	8	H	X	h	x	ê	Ì	¿	╕	╚	╪	Φ	°
9	○	↓	)	9	I	Y	i	y	Ê	Õ	Ò	╣	╔	┘	Θ	·
A	◙	→	*	:	J	Z	j	z	è	Ü	¬	║	╩	┌	Ω	·
B	♂	←	+	;	K	[	k	{	í	¢	½	╗	╦	█	δ	√
C	♀	∟	´	<	L	\	l	|	ô	£	¼	╝	╠	▄	∞	ⁿ
D	♪	↔	-	=	M	]	m	}	ì	Ù	¡	╜	═	▌	ø	²
E	♫	▲	.	>	N	^	n	~	Ã	₧	«	╛	╬	▐	ε	■
F	☼	▼	/	?	O	_	o		Â	Ó	»	┐	╧	▀	∩	SP

IBM Code Page 863

	0	1	2	3	4	5	6	7	8	9	A	B	C	D	E	F
0	∅	▸	SP	0	@	P	`	p	Ç	É	|	░	└	╨	α	≡
1	☺	◂	!	1	A	Q	a	q	ü	È	'	▒	┴	╤	β	±
2	☻	↕	"	2	B	R	b	r	é	Ê	ó	▓	┬	╥	Γ	≥
3	♥	‼	#	3	C	S	c	s	â	ô	ú	│	├	╙	π	≤
4	♦	¶	$	4	D	T	d	t	Â	Ë	¨	┤	─	╘	Σ	⌠
5	♣	§	%	5	E	U	e	u	à	Ï	¸	╡	┼	╒	σ	⌡
6	♠	_	&	6	F	V	f	v	¶	û	³	╢	╞	╓	µ	÷
7	●	↨	’	7	G	W	g	w	ç	ù	¯	╖	╟	╫	τ	≈
8	◘	↑	(	8	H	X	h	x	ê	¤	Î	╕	╚	╪	Φ	°
9	○	↓	)	9	I	Y	i	y	ë	Ô	⌐	╣	╔	┘	Θ	·
A	◙	→	*	:	J	Z	j	z	è	Ü	¬	║	╩	┌	Ω	·
B	♂	←	+	;	K	[	k	{	ï	¢	½	╗	╦	█	δ	√
C	♀	┘	´	<	L	\	l	|	î	£	¼	╝	╠	▄	∞	ⁿ
D	♪	↔	-	=	M	]	m	}	=	Ù	¾	╜	═	▌	ø	²
E	♫	▲	.	>	N	^	n	~	À	Û	«	╛	╬	▐	ε	■
F	☼	▼	/	?	O	_	o		§	ƒ	»	┐	╧	▀	∩	SP

	0	1	2	3	4	5	6	7	8	9	A	B	C	D	E	F
0	Ø	▸	SP	0	@	P	`	p	Ç	É	á	░	└	╨	α	≡
1	☺	◂	!	1	A	Q	a	q	ü	æ	í	▒	┴	╤	β	±
2	☻	↕	"	2	B	R	b	r	é	Æ	ó	▓	┬	╥	Γ	≥
3	♥	‼	#	3	C	S	c	s	â	ô	ú	│	├	╙	π	≤
4	♦	¶	$	4	D	T	d	t	ä	ö	ñ	┤	─	╘	Σ	⌠
5	♣	§	%	5	E	U	e	u	à	ò	Ñ	╡	┼	╒	σ	⌡
6	♠	_	&	6	F	V	f	v	å	û	ª	╢	╞	╓	µ	÷
7	•	↨	’	7	G	W	g	w	ç	ù	º	╖	╟	╫	τ	≈
8	◘	↑	(	8	H	X	h	x	ê	ÿ	¿	╕	╚	╪	Φ	°
9	○	↓	)	9	I	Y	i	y	ë	Ö	⌐	╣	╔	┘	Θ	·
A	◙	→	*	:	J	Z	j	z	è	Ü	¬	║	╩	┌	Ω	·
B	♂	←	+	;	K	[	k	{	ï	ø	½	╗	╦	█	δ	√
C	♀	∟	´	<	L	\	l	|	î	£	¼	╝	╠	▄	∞	ⁿ
D	♪	↔	-	=	M	]	m	}	ì	Ø	¡	╜	═	▌	ø	²
E	♫	▲	.	>	N	^	n	~	Ä	Pt	«	╛	╬	▐	ε	■
F	☼	▼	/	?	O	_	o		Å	*f*	¤	┐	╧	▀	∩	SP

	2	3	4	5	6	7		A	B	C	D	E	F
0		0	@	P	'	p		á	▒	└	o	Ó	-
1	!	1	A	Q	a	q		í	▒	┴	a	ß	±
2	"	2	B	R	b	r		ò	▓	┬	Ê	Ô	
3	#	3	C	S	c	s		ú	│	├	Ë	Ò	¾
4	$	4	D	T	d	t		ñ	┤	)	È	õ	¶
5	%	5	E	U	e	u		Ñ	Á	┼	€	Õ	§
6	&	6	F	V	f	v		Ğ	Â	ã	Í	µ	÷
7	‘	7	G	W	g	w		ğ	À	Ã	Î		¸
8	(	8	H	X	h	x		¿	©	╚	ï	×	°
9	)	9	I	Y	i	y		®	╣	╔	┘	Ú	¨
A	0	:	J	Z	j	z		¬	║	╩	┌	Û	•
B	+	;	K	[	k	{		½	╗	╦	█	Ù	¹
C	,	<	L	\	«	|		¼	╝	╠	▄	ì	³
D	-	=	M	]	m	}		ì	¢	═	¦	ÿ	²
E	.	>	N	^	n	~		«	¥	╬	Ì	¯	■
F	/	?	O	_	o			»	¸	¤	▀	´	

C 4. EPSON Extended Graphics Character Table

EPSON Character Table

	0	1	2	3	4	5	6	7	8	9	A	B	C	D	E	F
0			SP	0	@	P	`	p	Ç	É	á	▒	└	╨	α	≡
1			!	1	A	Q	a	q	ü	æ	í	▒	┴	╤	β	±
2			"	2	B	R	b	r	é	Æ	ó	▓	┬	╥	Γ	≥
3			#	3	C	S	c	s	â	ô	ú	│	├	╙	π	≤
4			$	4	D	T	d	t	ä	ö	ñ	┤	─	╘	Σ	⌠
5		§	%	5	E	U	e	u	à	ò	Ñ	╡	┼	╒	σ	⌡
6			&	6	F	V	f	v	å	û	ª	╢	╞	╓	µ	÷
7			’	7	G	W	g	w	ç	ù	º	╖	╟	╫	τ	≈
8			(	8	H	X	h	x	ê	ÿ	¿	╕	╚	╪	Φ	°
9			)	9	I	Y	i	y	ë	Ö	⌐	╣	╔	┘	Θ	·
A			*	:	J	Z	j	z	è	Ü	¬	║	╩	┌	Ω	·
B			+	;	K	[	k	{	ï	¢	½	╗	╦	█	δ	√
C			´	<	L	\	l	|	î	£	¼	╝	╠	▄	∞	ⁿ
D			-	=	M	]	m	}	ì	¥	¡	╜	═	▌	ø	²
E			.	>	N	^	n	~	Ä	Pts	«	╛	╬	▐	ε	■
F			/	?	O	_	o		Å	ƒ	»	┐	╧	▀	∩	SP

	23	24	40	5B	5C	5D	5E	60	7B	7C	7D	7E
1: USA	#	$	@	[	\	]	^	`	{	|	}	~
2: FRANCE	#	$	à	°	ç	§	^	`	é	ù	è	¨
3: GERMANY	#	$	§	Ä	Ö	Ü	^	`	ä	ö	ü	ß
4: U.K.	£	$	@	[	\	]	^	`	{	|	}	~
5: DENMARK	#	$	@	Æ	Ø	Å	^	`	æ	ø	å	~
6: SWEDEN	#	¤	É	Ä	Ö	Å	Ü	é	ä	ö	å	ü
7: ITALY	#	$	@	°	\	é	^	ù	à	ò	è	ì
8: SPAIN	Pts	$	@	¡	Ñ	¿	^	`	¨	ñ	}	~
9: JAPAN	#	$	@	[	¥	]	^	`	{	|	}	~
10: NORWAY	#	¤	É	Æ	Ø	Å	Ü	é	æ	ø	å	ü
11: DENMARK 2	#	$	É	Æ	Ø	Å	Ü	é	æ	ø	å	ü
12: SPAIN 2	#	$	á	¡	Ñ	¿	é	`	í	ñ	ó	ú
13: LATIN AM.	#	$	á	¡	Ñ	¿	é	Ü	í	ñ	ó	ú
14: TURKEY	#	ī	Ī	Ç	Ö	Ş	Ü	ğ	ç	ö	ş	ü
15: LEGAL	#	$	§	°	'	"	¶	`	©	®	†	™

EPSON Italic Character Table

	0	1	2	3	4	5	6	7	8	9	A	B	C	D	E	F
0			SP	0	@	P	`	p			*SP*	*0*	*@*	*P*	*`*	*p*
1			!	1	A	Q	a	q			*!*	*1*	*A*	*Q*	*a*	*q*
2			"	2	B	R	b	r			*"*	*2*	*B*	*R*	*b*	*r*
3			#	3	C	S	c	s			*#*	*3*	*C*	*S*	*c*	*s*
4			$	4	D	T	d	t			*$*	*4*	*D*	*T*	*d*	*t*
5			%	5	E	U	e	u			*%*	*5*	*E*	*U*	*e*	*u*
6			&	6	F	V	f	v			*&*	*6*	*F*	*V*	*f*	*v*
7			’	7	G	W	g	w			*’*	*7*	*G*	*W*	*g*	*w*
8			(	8	H	X	h	x			*(*	*8*	*H*	*X*	*h*	*x*
9			)	9	I	Y	i	y			*)*	*9*	*I*	*Y*	*i*	*y*
A			*	:	J	Z	j	z			*	*:*	*J*	*Z*	*j*	*z*
B			+	;	K	[	k	{			+	*;*	*K*	*[*	*k*	*{*
C			´	<	L	\	l	|			´	<	*L*	**	*l*	*|*
D			-	=	M	]	m	}			-	=	*M*	*]*	*m*	*}*
E			.	>	N	^	n	~			*.*	>	*N*	^	*n*	~
F			/	?	O	_	o				*/*	*?*	*O*	*_*	*o*	

NV EPSON Italic Character Table (part 1)

	23	24	40	5B	5C	5D	5E	60	7B	7C	7D	7E
1: USA	#	$	@	[	\	]	^	`	{	|	}	~
2: FRANCE	#	$	à	°	ç	§	^	`	é	ù	è	¨
3: GERMANY	#	$	§	Ä	Ö	Ü	^	`	ä	ö	ü	ß
4: U.K.	£	$	@	[	\	]	^	`	{	|	}	~
5: DENMARK	#	$	@	Æ	Ø	Å	^	`	æ	ø	å	~
6: SWEDEN	#	¤	É	Ä	Ö	Å	Ü	é	ä	ö	å	ü
7: ITALY	#	$	@	°	\	é	^	ù	à	ò	è	ì
8: SPAIN	Pts	$	@	¡	Ñ	¿	^	`	¨	ñ	}	~
9: JAPAN	#	$	@	[	¥	]	^	`	{	|	}	~
10: NORWAY	#	¤	É	Æ	Ø	Å	Ü	é	æ	ø	å	ü
11: DENMARK 2	#	$	É	Æ	Ø	Å	Ü	é	æ	ø	å	ü
12: SPAIN 2	#	$	á	¡	Ñ	¿	é	`	í	ñ	ó	ú
13: LATIN AM.	#	$	á	¡	Ñ	¿	é	Ü	í	ñ	ó	ú
14: TURKEY	#	ī	Ī	Ç	Ö	Ş	Ü	ğ	ç	ö	ş	ü
15: LEGAL	#	$	§	°	'	"	¶	`	©	®	†	™

NV EPSON Italic Character Table (part 2)

	A3	A4	C0	DB	DC	DD	DE	E0	FB	FC	FD	FE
1: USA	#	$	@	[	\	]	^	`	{	|	}	~
2: FRANCE	#	$	à	°	ç	§	^	`	é	ù	è	¨
3: GERMANY	#	$	§	Ä	Ö	Ü	^	`	ä	ö	ü	ß
4: U.K.	£	$	@	[	\	]	^	`	{	|	}	~
5: DENMARK	#	$	@	Æ	Ø	Å	^	`	æ	ø	å	~
6: SWEDEN	#	¤	É	Ä	Ö	Å	Ü	é	ä	ö	å	ü
7: ITALY	#	$	@	°	\	é	^	ù	à	ò	è	ì
8: SPAIN	Pts	$	@	¡	Ñ	¿	^	`	¨	ñ	}	~
9: JAPAN	#	$	@	[	¥	]	^	`	{	|	}	~
10: NORWAY	#	¤	É	Æ	Ø	Å	Ü	é	æ	ø	å	ü
11: DENMARK 2	#	$	É	Æ	Ø	Å	Ü	é	æ	ø	å	ü
12: SPAIN 2	#	$	á	¡	Ñ	¿	é	`	í	ñ	ó	ú
13: LATIN AM.	#	$	á	¡	Ñ	¿	é	Ü	í	ñ	ó	ú
14: TURKEY	#	ī	Ī	Ç	Ö	Ş	Ü	ğ	ç	ö	ş	ü
15: LEGAL	#	$	§	°	'	"	¶	`	©	®	†	™

Code Table OCR-A

	0	1	2	3	4	5	6	7
0	NUL	DLE	SP	0	@	P	┤	p
1	SOH	DC1	!	1	A	Q	a	q
2	STX	DC2	"	2	B	R	b	r
3	ETX	DC3	#	3	C	S	c	s
4	EOT	DC4	$	4	D	T	d	t
5	ENQ	NAK	%	5	E	U	e	u
6	ACK	SYN	&	6	F	V	f	v
7	BEL	ETB	`	7	G	W	g	w
8	BS	CAN	(	8	H	X	h	x
9	HT	EM	)	9	I	Y	i	y
A	LF	SUB	*	:	J	Z	j	z
B	VT	ESC	+	;	K	[	k	{
C	FF	FS	¬	<	L	\	l	|
D	CR	GR	-	=	M	]	m	}
E	SO	RS	.	>	N	^	n	⌠
F	SI	US	/	?	O	┴	o	

C.5 Code Pages for the Eastern European Countries (EE)

CODEPAGE 437 Greek

	2	3	4	5	6	7	8	9	A	B	C	D	E	F
0	SP	0	@	P	`	p	A	P	ι	░	└	╨	ω	’Ω
1	!	1	A	Q	a	q	B	Σ	κ	▒	┴	╤	ά	±
2	"	2	B	R	b	r	Γ	T	λ	▓	┬	╥	έ	≥
3	#	3	C	S	c	s	Δ	Y	μ	│	├	╙	ή	≤
4	$	4	D	T	d	t	E	Φ	ν	┤	─	╘	ϊ	⌠
5	%	5	E	U	e	u	Z	X	ξ	╡	┼	╒	ί	⌡
6	&	6	F	V	f	v	H	Ψ	ο	╢	╞	╓	ό	÷
7	’	7	G	W	g	w	Θ	Ω	π	╖	╟	╫	ύ	≈
8	(	8	H	X	h	x	I	α	ρ	╕	╚	╪	ϋ	°
9	)	9	I	Y	i	y	K	β	σ	╣	╔	┘	ώ	£
A	*	:	J	Z	j	z	Λ	γ	ς	║	╩	┌	’A	¥
B	+	;	K	[	k	{	M	δ	τ	╗	╦	█	’E	√
C	´	<	L	\	l	|	N	ε	υ	╝	╠	▄	’H	ⁿ
D	-	=	M	]	m	}	Ξ	ζ	φ	╜	═	▌	’I	²
E	.	>	N	^	n	~	O	η	χ	╛	╬	▐	’O	■
F	/	?	O	_	o		Π	θ	ψ	┐	╧	▀	’Y	

CODEPAGE 851 Greek

	2	3	4	5	6	7	8	9	A	B	C	D	E	F
0	SP	0	@	P	`	p	Ç	΄Ι	ϊ	░	└	Τ	ζ	-
1	!	1	A	Q	a	q	ü		ΐ	▒	┴	Υ	η	±
2	"	2	B	R	b	r	é	΄Ο	ό	▓	┬	Φ	θ	‗
3	#	3	C	S	c	s	â	ô	ύ	│	├	Χ	ι	¾
4	$	4	D	T	d	t	ä	ö	Ά	┤	─	Ψ	κ	΄
5	%	5	E	U	e	u	à	΄Υ	Β	Κ	┼	Ω	λ	§
6	&	6	F	V	f	v	Α	û	Γ	Λ	Π	α	μ	ψ
7	’	7	G	W	g	w	ç	ù	Δ	Μ	Ρ	β	ν	¸
8	(	8	H	X	h	x	ê	΄Ω	Ε	Ν	╚	γ	ξ	°
9	)	9	I	Y	i	y	ë	Ö	Ζ	╣	╔	┘	ο	¨
A	*	:	J	Z	j	z	è	Ü	Η	║	╩	┌	π	ω
B	+	;	K	[	k	{	ï	ά	½	╗	╦	█	ρ	ΰ
C	´	<	L	\	l	|	î	£	Θ	╝	╠	▄	σ	ΰ
D	-	=	M	]	m	}	΄Ε	έ	Ι	Ξ	═	ζ	ς	ώ
E	.	>	N	^	n	~	Ä	ή	«	Ο	╬	ε	τ	■
F	/	?	O	_	o		΄Η	ί	»	┐	Σ	▀	΄	

	2	3	4	5	6	7	8	9	A	B	C	D	E	F
0	SP	0	@	P	`	p	Ç	É		°	ΐ	Π	ű	π
1	!	1	A	Q	a	q	ü	æ	΄	±	A	P	α	ρ
2	"	2	B	R	b	r	é	Æ	’	²	B		β	ς
3	#	3	C	S	c	s	â	ô	£	³	Γ	Σ	γ	σ
4	$	4	D	T	d	t	ä	ö		΄	Δ	T	δ	τ
5	%	5	E	U	e	u	à	ò		□	E	Y	ε	υ
6	&	6	F	V	f	v	å	û	¦	’A	Z	Φ	ζ	φ
7	’	7	G	W	g	w	ç	ù	§	•	H	X	η	χ
8	(	8	H	X	h	x	ê	ÿ	¨	’E	Θ	Ψ	θ	ψ
9	)	9	I	Y	i	y	ë	Ö	©	’H	I	Ω	ι	ω
A	*	:	J	Z	j	z	è	Ü	Ί	’I	K	Ϊ	κ	ϊ
B	+	;	K	[	k	{	ï	¢	«	»	Λ	Ÿ	λ	ü
C	΄	<	L	\	l	|	î	£	¬	’O	M	ά	μ	ό
D	-	=	M	]	m	}	ì	¥		½	N	έ	ν	ύ
E	.	>	N	^	n	~	Ä	Pts		’Y	Ξ	ή	ξ	ώ
F	/	?	O	_	o		Å	ƒ	−	’Ω	O	ί	ο	

	2	3	4	5	6	7	8	9	A	B	C	D	E	F
0	SP	0	@	P	`	p	ђ	љ	а	░	.	л	Я	–
1	!	1	A	Q	a	q	Ђ	Љ	А	▒	⊥	Л	р	ы
2	"	2	B	R	b	r	ѓ	њ	б	▓	0	м	Р	Ы
3	#	3	C	S	c	s	Ѓ	Њ	Б	│	├	М	с	з
4	$	4	D	T	d	t	ё	ћ	ц	┤	─	н	С	З
5	%	5	E	U	e	u	Ё	Ћ	Ц	х	┼	Н	т	ш
6	&	6	F	V	f	v	є	ќ	д	Х	к	о	Т	Ш
7	*	7	G	W	g	w	Є	Ќ	Д	и	К	О	у	э
8	(	8	H	X	h	x	s	ў	е	И	╚	п	У	Э
9	)	9	I	Y	i	y	S	Ў	Е	╣	╔	-	ж	щ
A	*	:	J	Z	j	z	i	ц	ф	║	╩	┌	Ж	Щ
B	+	;	K	[	k	{	I	Ц	Ф	╗	╦	▉	в	ч
C	'	<	L	\	l	|	ї	ю	г	╝	╠	▄	В	Ч
D	-	=	M	]	m	}	Ї	Ю	Г	и́	═	П	ь	
E	.	>	N	^	n	~	j	ъ	«	И́	╬	я	Ь	■
F	/	?	O	_	o		J	Ъ	»	,	¤	▉	№	

	2	3	4	5	6	7	8	9	A	B	C	D	E	F
0	SP	0	@	P	`	p	А	Р	а	▒	└	╨	р	Ё
1	!	1	A	Q	a	q	Б	С	б	▒	┴	╤	с	ё
2	”	2	B	R	b	r	В	Т	в	▓	┬	╥	т	Є
3	#	3	C	S	c	s	Г	У	г	│	├	╙	у	є
4	$	4	D	T	d	t	Д	Ф	д	┤	─	╘	ф	Ї
5	%	5	E	U	e	u	Е	Х	е	╡	┼	╒	х	ї
6	&	6	F	V	f	v	Ж	Ц	ж	╢	╞	╓	ц	Ў
7	’	7	G	W	g	w	З	Ч	з	╖	╟	╫	ч	ў
8	(	8	H	X	h	x	И	Ш	и	╕	╚	╪	ш	°
9	)	9	I	Y	i	y	Й	Щ	й	╣	╔	┘	щ	●
A	*	:	J	Z	j	z	К	Ъ	к	║	╩	┌	ь	●
B	+	;	K	[	k	{	Л	Ы	л	╗	╦	█	ы	√
C	´	<	L	\	l	|	М	Ь	м	╝	╠	▄	ъ	№
D	-	=	M	]	m	}	Н	Э	н	╜	-	▌	з	¤
E	.	>	N	^	n	~	О	Ю	о	╛	╬	▐	ю	■
F	/	?	O	_	o		П	Я	п	┐	╧	▄	я	

	2	3	4	5	6	7	8	9	A	B	C	D	E	F
0	SP	0	@	P	`	p		΄	ï	░	└	Τ	ζ	–
1	!	1	A	Q	a	q		Ϊ	ΐ	▒	┴	Υ	η	±
2	"	2	B	R	b	r		’Ο	ό	▓	┬	Φ	θ	υ
3	#	3	C	S	c	s			ύ	│	├	Χ	ι	φ
4	$	4	D	T	d	t			Α	┤	─	Ψ	κ	χ
5	%	5	E	U	e	u		’Υ	Β	Κ	┼	Ω	λ	§
6	&	6	F	V	f	v	Ά	Ϋ	Γ	Λ	Π	α	μ	ψ
7	’	7	G	W	g	w		©	Δ	Μ	Ρ	β	ν	∴
8	(	8	H	X	h	x	●	’Ω	Ε	Ν	╚	γ	ξ	°
9	)	9	I	Y	i	y	¬	²	Ζ	╣	╔	┘	ο	¨
A	*	:	J	Z	j	z	¦	³	Η	║	╩	┌	π	ω
B	+	;	K	[	k	{	‘	ά	½	╗	╦	█	ρ	ϋ
C	´	<	L	\	l	|	´	£	Θ	╝	╠	▄	σ	ΰ
D	-	=	M	]	m	}	’Ε	έ	Ι	Ξ	□	ō	ς	ώ
E	.	>	N	^	n	~	-	ή	«	Ο	╬	ε	τ	■
F	/	?	O	_	o		’Η	ί	»	┐	Σ	▀	´	

	2	3	4	5	6	7	8	9	A	B	C	D	E	F
0	SP	0	@	P	`	p	Ç	É	á	░	└	ð	Ó	-
1	!	1	A	Q	a	q	ü	Ĺ	í	▒	┴	Đ	ß	˝
2	"	2	B	R	b	r	é	Ľ	ó	▓	┬	Ď	ô	˛
3	#	3	C	S	c	s	â	ô	ú	│	├	Ë	Ń	ˇ
4	$	4	D	T	d	t	ä	ö	Ą	┤	─	ď	ń	˘
5	%	5	E	U	e	u	ů	Ľ	ą	Á	┼	Ň	ň	§
6	&	6	F	V	f	v	ć	ľ	Ž	Â	Ă	í	Š	÷
7	’	7	G	W	g	w	ç	Ś	ž	Ě	ă	î	š	0
8	(	8	H	X	h	x	ł	ś	Ę	Ş	╚	ě	Ŕ	°
9	)	9	I	Y	i	y	ë	Ö	ę	╣	╔	┘	Ú	¨
A	*	:	J	Z	j	z	Ő	Ü	¬	║	╩	┌	ŕ	·
B	+	;	K	[	k	{	ő	Ť	ź	╗	╦	█	Ű	ű
C	´	<	L	\	l	|	î	ť	Č	╝	╠	▄	ý	Ř
D	-	=	M	]	m	}	Ź	Ł	ş	Ż	□	Ţ	Ý	ř
E	.	>	N	^	n	~	Ä	×	«	ż	╬	Ů	ţ	■
F	/	?	O	_	o		Ć	č	»	┐	¤	■	´	

	2	3	4	5	6	7	8	9	A	B	C	D	E	F
0	SP	0	@	P	`	p	Č	É	á	▒	└	╨	α	≡
1	!	1	A	Q	a	q	ü	ž	í	▒	┴	╤	β	±
2	"	2	B	R	b	r	é	Ž	ó	▓	┬	╥	Γ	≥
3	#	3	C	S	c	s	ď	ô	ú	│	├	╙	∏	≤
4	$	4	D	T	d	t	ä	ö	ň	┤	─	╘	∑	⌠
5	%	5	E	U	e	u	Ď	ó	Ň	╡	┼	╒	σ	⌡
6	&	6	F	V	f	v	Ť	ů	Ů	╢	╞	╓	µ	÷
7	’	7	G	W	g	w	č	Ú	ô	╖	╟	╫	τ	≈
8	(	8	H	X	h	x	ě	ý	š	╕	╚	╪	Φ	°
9	)	9	I	Y	i	y	Ě	Ö	ř	╣	╔	┘	Θ	•
A	*	:	J	Z	j	z	Ĺ	Ü	ŕ	║	╩	┌	Ω	•
B	+	;	K	[	k	{	Í	Š	Ŕ	╗	╦	▒	δ	√
C	´	<	L	\	l	|	ľ	Ľ	¼	╝	╠	▄	ω	ⁿ
D	-	=	M	]	m	}	Í	Ý	§	╜	□	▌	ø	²
E	.	>	N	^	n	~	Ä	Ř	«	╛	╬	▐	ε	■
F	/	?	O	_	o		Á	t`	»	┐	╧	▀	∩	

ISO LATIN 2

	2	3	4	5	6	7		A	B	C	D	E	F
0	SP	0	@	P	`	p			˚	Ŕ	Đ	ŕ	ð
1	!	1	A	Q	a	q		Ą	ą	Á	Ń	á	ń
2	"	2	B	R	b	r		˘	˛	Â	Ň	â	ň
3	#	3	C	S	c	s		Ł	ł	Ă	Ó	ă	ó
4	$	4	D	T	d	t		¤	'	Ä	Ô	ä	ô
5	%	5	E	U	e	u		Ľ	ľ	Ĺ	Ő	ľ	ő
6	&	6	F	V	f	v		Ś	ś	Ć	Ö	ć	ö
7	’	7	G	W	g	w		§	ˇ	Ç	x	ç	÷
8	(	8	H	X	h	x		¨	¸	Č	Ř	č	ř
9	)	9	I	Y	i	y		Š	š	É	Ů	é	ů
A	*	:	J	Z	j	z		Ş	ş	Ę	Ú	ę	ú
B	+	;	K	[	k	{		Ť	ť	Ë	Ű	ë	ű
C	´	<	L	\	l	|		Ź	ź	Ě	Ü	ě	ü
D	-	=	M	]	m	}		-	˝	Í	Ý	í	ý
E	.	>	N	^	n	~		Ž	ž	Î	Ţ	î	ţ
F	/	?	O	_	o			Ż	ż	Ď	ß	ď	•

MAZOVIA

	2	3	4	5	6	7	8	9	A	B	C	D	E	F
0	SP	0	@	P	`	p	Ç	Ę	ź	▒	└	╨	α	≡
1	!	1	A	Q	a	q	ü	ę	Ż	▒	┴	╤	β	±
2	"	2	B	R	b	r	é	ł	ó	▓	┬	╥	Γ	≥
3	#	3	C	S	c	s	â	ô	Ó	│	├	╙	π	≤
4	$	4	D	T	d	t	ä	ö	ń	┤	─	╘	∑	⌠
5	%	5	E	U	e	u	à	Ć	Ń	╡	┼	╒	σ	⌡
6	&	6	F	V	f	v	ą	û	ź	╢	╞	╓	µ	÷
7	’	7	G	W	g	w	ç	ù	ż-	╖	╟	╫	τ	≈
8	(	8	H	X	h	x	ê	Ś	¿	╕	╚	╪	Φ	°
9	)	9	I	Y	i	y	ë	Ö	⌐	╣	╔	┘	Θ	●
A	*	:	J	Z	j	z	è	Ü	¬	║	╩	┌	Ω	●
B	+	;	K	[	k	{	ï	zl	½	╗	╦	█	δ	√
C	´	<	L	\	l	|	î	Ł	¼	╝	╠	▄	∞	ⁿ
D	-	=	M	]	m	}	ć	Y-	i	╜	-	▌	ø	²
E	.	>	N	^	n	~	Ä	ś	«	╛	╬	▐	ε	■
F	/	?	O	_	o		Ą	ƒ	»	┐	╧	▀	∩	

	2	3	4	5	6	7	8	9	A	B	C	D	E	F
0	SP	0	@	P	`	p	Ç	É	á	▒	└	╨	α	≡
1	!	1	A	Q	a	q	ü	æ	í	▒	┴	╤	β	±
2	"	2	B	R	b	r	é	Æ	ó	▓	┬	╥	Γ	≥
3	#	3	C	S	c	s	â	ő	ú	│	├	╙	π	≤
4	$	4	D	T	d	t	ä	ö	ñ	┤	─	╘	∑	⌠
5	%	5	E	U	e	u	à	ó	Ñ	╡	┼	╒	σ	⌡
6	&	6	F	V	f	v	å	ű	ª	╢	╞	╓	µ	÷
7	’	7	G	W	g	w	ç	Ú	Ő	╖	╟	╫	τ	≈
8	(	8	H	X	h	x	ê	Ü	¿	╕	╚	╪	Φ	°
9	)	9	I	Y	i	y	ë	Ö	⌐	╣	╔	┘	Θ	●
A	*	:	J	Z	j	z	è	Ü	¬	║	╩	┌	Ω	●
B	+	;	K	[	k	{	ï	¢	½	╗	╦	█	δ	√
C	´	<	L	\	l	|	î	£	¼	╝	╠	▄	∞	ⁿ
D	-	=	M	]	m	}	Í	Y-	¡	╜	□	▌	ø	²
E	.	>	N	^	n	~	Ä	Pt	«	╛	╬	▐	ε	■
F	/	?	O	_	o		Á	ƒ	»	┐	╧	▀	∩	

	2	3	4	5	6	7	8	9	A	B	C	D	E	F
0	SP	0	Ž	P	ž	p	Ç	É	á	░	└	ð	Ó	-
1	!	1	A	Q	a	q	ü	Ľ	í	▒	┴	Đ	ß	˝
2	"	2	B	R	b	r	é	ľ	ó	▓	┬	Ď	Ô	˛
3	#	3	C	S	c	s	â	ô	ú	│	├	Ë	Ń	ˇ
4	$	4	D	T	d	t	ä	ö	Ą	┤	─	ď	ń	˘
5	%	5	E	U	e	u	ů	Ľ	ą	Á	┼	Ň	ň	§
6	&	6	F	V	f	v	ć	ľ	Ž	Â	Ă	Í	Š	÷
7	’	7	G	W	g	w	ç	Ś	ž	Ě	ă	Î	š	0
8	(	8	H	X	h	x	ł	ś	Ę	Ş	╚	ě	Ŕ	°
9	)	9	I	Y	i	y	ë	Ö	ę	╣	╔	┘	Ú	¨
A	*	:	J	Z	j	z	Ő	Ü	¬	║	╩	┌	ŕ	·
B	+	;	K	Š	k	š	ő	Ť	ź	╗	╦	█	Ű	ű
C	´	<	L	Đ	l	ð	î	ť	Č	╝	╠	▄	ý	Ř
D	-	=	M	Ć	m	ć	Ź	Ł	ş	Ż	-	Ţ	Ý	ř
E	.	>	N	Č	n	č	Ä	×	«	ż	╬	Ů	ţ	■
F	/	?	O	_	o		Ć	č	»	┐	¤	■	´	

	0	1	2	3	4	5	6	7	8	9	A	B	C	D	E	F
0	∅	▸	SP	0	@	P	‘	p	А	Р	а	▒	└	Š	р	Ē
1	☺	◂	!	1	A	Q	a	q	Б	С	б	▒	┴	╤	с	ē
2	☻	↕	"	2	B	R	b	r	В	Т	в	▓	┬	č	т	Ģ
3	♥	‼	#	3	C	S	c	s	⌈	у	г	│	├	Č	у	ķ
4	♦	¶	$	4	D	T	d	t	Д	ф	д	┤	─	Ļ	ф	Ķ
5	♣	§	%	5	E	U	e	u	Е	Х	е	Ā	┼	╒	х	ļ
6	♠	–	&	6	F	V	f	v	Ж	Ц	ж	╢	ā	g	ц	Ļ
7	•	↨	’	7	G	W	g	w	З	ц	з	ņ	╟	Ī	ч	ž
8	◘	↑	(	8	H	X	h	x	И	Ш	и	╕	╚	ī	ш	Ž
9	○	↓	)	9	I	Y	i	y	Й	Щ	й	╣	╔	┘	щ	Ō
A	◙	→	*	:	J	Z	j	z	К	Ъ	к	║	╩	┌	ъ	•
B	♂	←	+	;	K	[	k	{	Л	ы	л	╗	╦	█	ы	√
C	♀	∟	0	<	L	\	ı	|	М	b	м	╝	╠	▄	ь	N
D	♪	↔	-	=	M	]	m	}	Н	Э	н	ō	═	ū	э	š
E	♫	▲	.	>	N	^	n	~	О	Ю	о	╜	╬	Ū	ю	■
F	☼	▼	/	?	O	_	o		П	Я	п	┐	╧	▀	я	

	0	1	2	3	4	5	6	7	8	9	A	B	C	D	E	F
0	ø	▸	SP	0	@	P	`	p	€			°	Ŕ	Đ	ŕ	ð
1	☺	◂	!	1	A	Q	a	q		`	˘	±	Á	Ń	á	ń
2	☻	↕	"	2	B	R	b	r	‚	´	ˇ	¸	Â	Ň	â	ň
3	♥	‼	#	3	C	S	c	s		‟	Ł	ł	Ă	Ó	ă	ó
4	♦	¶	$	4	D	T	d	t	„	”	¤	'	Ä	Ô	ä	ô
5	♣	§	%	5	E	U	e	u	…	·	Ą	µ	Ľ	Ő	ľ	ő
6	♠	_	&	6	F	V	f	v	†	-	¦	¶	Ć	Ö	ć	ö
7	•	↨	’	7	G	W	g	w	‡	—	§	.	Ç	x	ç	÷
8	◘	↑	(	8	H	X	h	x			¨	¸	Č	Ř	č	ř
9	○	↓	)	9	I	Y	i	y	‰	™	©	ą	É	Ů	é	ů
A	◙	→	*	:	J	Z	j	z	Š	š	Ş	ş	Ę	Ú	ę	ú
B	♂	←	+	;	K	[	k	{	<	>	□	□	Ë	Ű	ë	ű
C	♀	∟	,	<	L	\	l	|	Ś	ś	¬	Ł	Ě	Ü	ě	ü
D	♪	↔	-	=	M	]	m	}	Ť	ť	-	˝	Í	Ý	í	ý
E	♫	▲	.	>	N	^	n	~	Ž	ž	®	ľ	Î	Ţ	î	ţ
F	☼	▼	/	?	O	_	o		Ź	ź	Ż	ż	Ď	ß	ď	•

C.6 Code Pages for the Eastern European Countries (EE2)

CODEPAGE 771

	0	1	2	3	4	5	6	7	8	9	A	B	C	D	E	F
0	ø	▸		0	@	P	`	p	А	Р	а	▒	└	╨	р	Ę
1	☺	◂	!	1	A	Q	a	q	Б	С	б	▒	┴	╤	с	ę
2	☻	↕	"	2	B	R	b	r	В	Т	в	▓	┬	╥	т	Ė
3	♥	‼	#	3	C	S	c	s	⌈	у	г	│	├	╙	у	ė
4	♦	¶	$	4	D	T	d	t	Д	ф	д	┤	─	╘	ф	Į
5	♣	§	%	5	E	U	e	u	Е	Х	е	╡	┼	╒	х	į
6	♠	–	&	6	F	V	f	v	Ж	Ц	ж	╢	╞	╓	ц	Š
7	•	↨	’	7	G	W	g	w	З	ц	з	╖	╟	╫	ч	š
8	◘	↑	(	8	H	X	h	x	И	Ш	и	╕	╚	╪	ш	Ų
9	○	↓	)	9	I	Y	i	y	Й	Щ	й	╣	╔	┘	щ	ų
A	◙	→	*	:	J	Z	j	z	К	Ъ	к	║	╩	┌	ъ	Ū
B	♂	←	+	;	K	[	k	{	Л	ы	л	╗	╦	█	ы	ū
C	♀	∟	0	<	L	\	ı	|	М	b	м	╝	╠	Ą	ь	Ž
D	♪	↔	-	=	M	]	m	}	Н	Э	н	╜	═	ą	э	ž
E	♫	▲	.	>	N	^	n	~	О	Ю	о	╛	╬	Č	ю	■
F	☼	▼	/	?	O	_	o		П	Я	п	┐	╧	č	я	

CODEPAGE 773

	0	1	2	3	4	5	6	7	8	9	A	B	C	D	E	F
0	ø	▸		0	@	P	`	p	Ċ	É	Ā	▒	└	°	Ó	Ę
1	☺	◂	!	1	A	Q	a	q	ü	æ	Ī	▒	┴	╤	ß	ę
2	☻	↕	"	2	B	R	b	r	é	Æ	Ó	▓	┬	˙	Ö	Ė
3	♥	‼	#	3	C	S	c	s	ā	ō	Ż	│	├	.	Ń	ė
4	♦	¶	$	4	D	T	d	t	ä	ö	ż	┤	─	¹	õ	Į
5	♣	§	%	5	E	U	e	u	g	Ģ	Ź	±	┼	„	Õ	į
6	♠	–	&	6	F	V	f	v	á	¢	˝	╢	÷	³	µ	Š
7	•	↨	’	7	G	W	g	w	ć	Ŝ	¦	‟	╟		ń	š
8	◘	↑	(	8	H	X	h	x	ł	ŝ	©	¼	╚	²	Ķ	Ų
9	○	↓	)	9	I	Y	i	y	ē	Ö	®	╣	╔	┘	ķ	ų
A	◙	→	*	:	J	Z	j	z	Ŗ	Ü	¬	║	╩	┌	Ļ	Ū
B	♂	←	+	;	K	[	k	{	ţ	ø	½	╗	╦	█	ļ	ū
C	♀	∟	0	<	L	\	ı	|	ī	£	¼	╝	╠	Ą	ņ	Ž
D	♪	↔	-	=	M	]	m	}	Ż	Ø	Ł	¶	═	ą	Ē	ž
E	♫	▲	.	>	N	^	n	~	Ä	x	«	§	╬	Č	Ņ	■
F	☼	▼	/	?	O	_	o		Á	¤	»	┐	╧	č	’	

	0	1	2	3	4	5	6	7	8	9	A	B	C	D	E	F
0	∅	▸		0	@	P	`	p	Ç	É	á	░	└	ą	α	≡
1	☺	◂	!	1	A	Q	a	q	ü	æ	í	▒	┴	č	β	±
2	☻	↕	"	2	B	R	b	r	é	Æ	ó	▓	┬	ę	Γ	≥
3	♥	‼	#	3	C	S	c	s	â	ô	ú	│	├	ė	Π	≤
4	♦	¶	$	4	D	T	d	t	ä	ö	□	┤	─	į	Σ	„
5	♣	§	%	5	E	U	e	u	à	ò	□	À	┼	š	σ	“
6	♠	–	&	6	F	V	f	v	å	û	ª	Ċ	Ų	ų	µ	0
7	•	↨	’	7	G	W	g	w	ç	ù	º	Ę	Ū	ű	τ	≈
8	◘	↑	(	8	H	X	h	x	ê	ÿ	¿	Ė	╚	ž	Φ	°
9	○	↓	)	9	I	Y	i	y	ë	Ö	⌐	╣	╔	┘	Θ	□
A	◙	→	*	:	J	Z	j	z	è	Ü	¬	║	╩	┌	Ω	□
B	♂	←	+	;	K	[	k	{	ï	¢	½	╗	╦	█	ǒ	√
C	♀	∟	0	<	L	\	ı	|	î	£	¼	╝	╠	■	∞	ⁿ
D	♪	↔	-	=	M	]	m	}	ì	¥	¡	¦	═	▌	ø	²
E	♫	▲	.	>	N	^	n	~	Ä	□	«	Š	╬	▐	ε	■
F	☼	▼	/	?	O	_	o		Å	ƒ	»	┐	Ż	▄	∩	

CODEPAGE 775

	0	1	2	3	4	5	6	7	8	9	A	B	C	D	E	F
0	ø	▸		0	@	P	`	p	Ċ	É	Ā	▒	└	ą	Ó	
1	☺	◂	!	1	A	Q	a	q	ü	æ	Ī	▒	┴	č	β	±
2	☻	↕	"	2	B	R	b	r	é	Æ	ó	▓	┬	ę	Ō	‗
3	♥	‼	#	3	C	S	c	s	ā	ō	Ż	│	├	ė	Ń	¾
4	♦	¶	$	4	D	T	d	t	ä	ö	ż	┤	─	į	õ	¶
5	♣	§	%	5	E	U	e	u	ģ	Ģ	ź	À	┼	š	Õ	§
6	♠	–	&	6	F	V	f	v	å	¢	"	Č	Ų	ų	µ	÷
7	•	↨	’	7	G	W	g	w	ć	Ś	|	Ę	Ū	ű	ń	„
8	◘	↑	(	8	H	X	h	x	ł	ś	©	Ė	╚	ž	Ķ	°
9	○	↓	)	9	I	Y	i	y	ē	Ö	®	╣	╔	┘	ķ	·
A	◙	→	*	:	J	Z	j	z	Ŗ	Ü	¬	║	╩	┌	Ļ	.
B	♂	←	+	;	K	[	k	{	ŗ	ø	½	╗	╦	█	ļ	,
C	♀	∟	0	<	L	\	ı	|	ī	£	¼	╝	╠	■	ņ	3
D	♪	↔	-	=	M	]	m	}	ź	Ø	Ł	Į	═	▌	Ē	2
E	♫	▲	.	>	N	^	n	~	Ä	x	«	Š	╬	▐	Ņ	■
F	☼	▼	/	?	O	_	o		Å	¤	»	┐	Ż	▄	´	

CODEPAGE BALTIC RIM

	0	1	2	3	4	5	6	7	8	9	A	B	C	D	E	F
0	ø	▸		0	@	P	`	p				°	Ą	Š	ą	š
1	☺	◂	!	1	A	Q	a	q		ˋ	ˮ	±	Į	Ń	į	ń
2	☻	↕	"	2	B	R	b	r	,	´	¢	²	Ā	Ņ	ā	ņ
3	♥	‼	#	3	C	S	c	s		¨	£	³	Ć	Ó	ć	ó
4	♦	¶	$	4	D	T	d	t	ˮ	„	¤	“	Ä	Ō	ä	ō
5	♣	§	%	5	E	U	e	u	…	•	ˮ	ρ	Å	Õ	å	õ
6	♠	–	&	6	F	V	f	v	†	–	|	¶	Ę	Ö	ę	ö
7	•	↨	’	7	G	W	g	w	‡	—	§	•	Ē	x	ē	÷
8	◘	↑	(	8	H	X	h	x			Ø	ø	Č	Ų	č	ų
9	○	↓	)	9	I	Y	i	y	‰	™	©	¹	É	Ł	é	ł
A	◙	→	*	:	J	Z	j	z			Ŗ	ŗ	Ź	Ś	ź	ś
B	♂	←	+	;	K	[	k	{	<	>	«	»	Ė	Ū	ė	ū
C	♀	∟	0	<	L	\	ı	|			¬	¼	Ģ	Ű	ģ	ű
D	♪	↔	-	=	M	]	m	}				½	Ķ	Ż	ķ	ż
E	♫	▲	.	>	N	^	n	~			®	¾	Ī	Ž	ī	ž
F	☼	▼	/	?	O	_	o				Æ	æ	Ļ	β	ļ	

CODEPAGE 1251

	2	3	4	5	6	7		A	B	C	D	E	F
0		0	@	P	`	p			°	А	Р	а	р
1	!	1	A	Q	a	q		ў	±	Б	С	б	с
2	"	2	B	R	b	r		ӯ	І	В	Т	в	т
3	#	3	C	S	c	s		Ј	і	Г	У	г	у
4	$	4	D	T	d	t		¤	г	Д	Ф	д	ф
5	%	5	E	U	e	u		Г	µ	Е	Х	е	х
6	&	6	F	V	f	v		¦	¶	Ж	Ц	ж	ц
7	’	7	G	W	g	w		§	•	З	Ч	з	ч
8	(	8	H	X	h	x		Ё	ё	И	Ш	и	ш
9	)	9	I	Y	i	y		©	№	Й	Щ	й	щ
A	*	:	J	Z	j	z		Є	є	К	Ъ	к	ъ
B	+	;	K	[	k	{		«	»	Л	Ы	л	ы
C	´	<	L	\	l	|		¬	ј	М	Ь	м	ь
D	-	=	M	]	m	}		–	S	Н	Э	н	э
E	.	>	N	^	n	~		®	s	О	Ю	о	ю
F	/	?	O	_	o			Ї	ї	П	Я	п	

	2	3	4	5	6	7		A	B	C	D	E	F
0		0	@	P	´	p		а	░	└	╨	р	Ё
1	!	1	A	Q	a	q		б	▒	┴	╤	с	ё
2	"	2	B	R	b	r		в	▓	┬	╥	т	Г
3	#	3	C	S	c	s		г	│	├	╙	у	г
4	$	4	D	T	d	t		д	┤	─	╘	ф	Є
5	%	5	E	U	e	u		е	╡	┼	╒	х	є
6	&	6	F	V	f	v		ж	╢	╞	╓	ц	І
7	’	7	G	W	g	w		з	╖	╟	╫	ч	і
8	(	8	H	X	h	x		и	╕	╚	╪	ш	Ї
9	)	9	I	Y	i	y		й	╣	╔	┘	щ	ї
A	0	:	J	Z	j	z		к	║	╩	┌	ъ	÷
B	+	;	K	[	k	{		л	╗	╦	█	ы	±
C	,	<	L	\	ĩ	|		м	╝	╠	▄	ь	№
D	−	=	M	]	m	}		н	╜	═	▌	э	¤
E	.	>	N	^	n	~		о	╛	╬	▐	ю	■
F	/	?	O	_	o			п	┐	╧	▀	я	

CODEPAGE 1250

	2	3	4	5	6	7	8	9	A	B	C	D	E	F
0		0	@	P	`	p	€			º	Ŕ	Đ	ŕ	đ
1	!	1	A	Q	a	q		`	ˇ	±	Á	Ń	á	ń
2	"	2	B	R	b	r	,	´	˘	¸	Â	Ň	â	ň
3	#	3	C	S	c	s		‟	Ł	ł	Ă	Ó	ă	ó
4	$	4	D	T	d	t	„	”	¤	´	Ä	Ô	ä	ô
5	%	5	E	U	e	u	…	•	Ą	µ	Ĺ	Ő	Í	ő
6	&	6	F	V	f	v	†	–	¦	¶	Ć	Ö	ć	ö
7	’	7	G	W	g	w	‡	—	§	·	Ç	×	ç	÷
8	(	8	H	X	h	x			¨	‹	Č	Ř	č	ř
9	)	9	I	Y	i	y	‰	™	©	ą	É	Ů	é	ů
A	*	:	J	Z	j	z	Š	š	Ş	ş	Ę	Ú	ę	ú
B	+	;	K	[	k	{	<	>	«	»	Ë	Ű	ë	ű
C	´	<	L	\	l	|	Ś	ś	¬	Ľ	Ě	Ü	ě	ü
D	-	=	M	]	m	}	Ť	ť		„	Í	Ý	Í	ý
E	.	>	N	^	n	~	Ž	ž	®	ľ	Î	Ţ	î	ţ
F	/	?	O	_	o		Ź	ź	Ż	ż	Ď	ß	ď	

	2	3	4	5	6	7	8	9	A	B	C	D	E	F
0		0	@	P	`	p	€			º	À	Đ	à	đ
1	!	1	A	Q	a	q		‘	¡	±	Á	Ñ	á	ñ
2	"	2	B	R	b	r	,	’	¢	²	Â	Ò	â	ò
3	#	3	C	S	c	s		“	£	³	Ă	Ó	ă	ó
4	$	4	D	T	d	t	„	”	¤	´	Ä	Ô	ä	ô
5	%	5	E	U	e	u	…	•	¥	µ	Å	Õ	å	õ
6	&	6	F	V	f	v	†	–	¦	¶	Æ	Ö	æ	ö
7	’	7	G	W	g	w	‡	—	§	·	Ç	×	ç	÷
8	(	8	H	X	h	x	ˆ	~	¨	¸	È	Ø	è	ø
9	)	9	I	Y	i	y	‰	™	©	¹	É	Ù	é	ù
A	*	:	J	Z	j	z	Š	š	a	o	Ê	Ú	ê	ú
B	+	;	K	[	k	{	<	>	«	»	Ë	Û	ë	û
C	´	<	L	\	l	|	Œ	œ	¬	¼	Ì	Ü	ì	ü
D	-	=	M	]	m	}				½	Í	Ý	Í	ý
E	.	>	N	^	n	~			®	¾	Î	Þ	î	þ
F	/	?	O	_	o			ÿ	¯	¿	Ï	ß	ï	ÿ

Appendix D IBM ProPrinter (TM) Quick Reference

This appendix contains basic information on the IBM ProPrinter XL 24 Emulation commands supported in the Printer:

IBM and Proprinter is a registered trademark of International Business Machines Corporation.

Characters used in control functions appear in monospaced type. Table 1 explains some of the conventions used.

A pair of numbers separated by a slash (/) character indicates Column/Row notation. This notation refers to the location of a character in a standard code table, such as ASCII. (example: 1/B = 1B is the hex-code for Escape)

Spaces appear between characters in sequence for clarity; they are not part of the format.

At the end of this chapter you will find a listing of the IBM ProPrinter Emulation commands classified by Hex Code and a Hex - Decimal conversion table.

The following conventions are used in the command listings:

Table 1 Conventions

ESC	Escape (1/B), introduces an escape sequence
Pn	Numeric parameter, or number of units that specify a distance or quantity pertaining to the escape sequence, control function or control string. Accepted values are 0...9999, may be preceded by + or -. If the parameter is in normal notation like “200” the programming in hex- code is according to a ASCII table. (“200” = 32,30,30 in hex). If the parameter must be programmed in hex-code the notation is with a slash. (1/A = 1A in hex-code)
v1...vn	A series of parameters pertaining to the escape sequence, control function or control string.
SP	Is standing for Space (hex 20)

(Native Command)

additional PSi command usable for the original emulation. Controls PSi specific printer features that are not present in the original printer.

Table 2: Control Codes

Column/Row	Mnemonic	Function
0/0	**NUL**	***Null***
0/8	**BS**	***Backspace***
0/9	**HT**	***Horizontal Tab***
0/A	**LF**	***Line Feed***
0/B	**VT**	***Vertical Tab***
0/C	**FF**	***Form Feed***
0/D	**CR**	***Carriage Return***
0/E	**SO**	***Double Width Printing By Line***
0/F	**SI**	***Condensed Printing (17.1 cpi)***
1/1	**DC1**	***Select Printer***
1/2	**DC2**	***Select Pica (10 cpi)***
1/3	**DC3**	***Buffer Data Flow Control***
1/4	**DC4**	***Cancel Double Width Printing By Line***
1/8	**CAN**	***Cancel Buffer***
1/B	**ESC**	***Initiate Escape Sequence***
2/0	**SP**	***Space***
7/F	**DEL**	***Delete***
1/B 5/1 2/3	**ESC Q #**	***Deselect Printer***
1/B 5/1 2/4	**ESC Q $**	***Deselect Printer***

Table 3: Vertical Form Handling

Escape Sequence	Mnemonic	Function
ESC 0		***Set Line Space to 1/8”***
ESC 1		***Set Line Space to 7/72”***
ESC 2		***Start Variable Line Space***
ESC 4		***Set Top of Form***
ESC 5 P1		***Carriage Return Function*** P1 = 1 or 0/1: select CR + LF P1 = 0 or 0/0: cancel CR
ESC A P1		***Set Line Space*** P1 = P1/72” lpi (non AGM) P1 = P1/60” lpi (AGM) (P1 = 0/1...5/5) ***Note:*** Default = 12/72” or 6 lpi
ESC B NUL		***Clear all Vertical Tabs***
ESC B P1 P2 . . . P64 NUL		***Set Vertical Tabs (Pn = 0/1...F/F)***
ESC C P1		***Set Form Length in Lines (P1 = 0/1...7/F)***
ESC C NUL P1		***Set Form Length in Inches (P1 = 0/1...1/6)***
ESC N P1		***Set Automatic Perforation Skip*** P1: number of lines from bottom of paper to skip. (P1 = 0/0...F/F)
ESC O		Cancel Automatic Perforation Skip
ESC [\ EOT NUL NUL NUL P1 NUL		***Set Line Space Unit*** EOT = 0/4 P1 = B/4 : select 1/180” P1 = D/8 : select 1/216” P1 = 0/0 : setting remains unchanged
ESC]		***Reverse Line Feed***
ESC [> P1 ; P2 ; P3 ; P4 s *(Native Command)*	**SPSIF**	***Select Paper Source and Insert Form*** (>), Select Paper Source,Print Gap, Paper Exit, Cut Mode.

Escape Sequence	Mnemonic	Function
ESC [> P1 s *(Native Command)*	**SPS**	***Select Paper Source:*** P1 = 0 Manual Feed [2]) P1 = 1 ASF, Bin 1 [1]) P1 = 2 ASF, Bin 2 [1]) P1 = 3 ASF, Bin 3 [1]) P1 = 6 upper Tractor P1 = 7 Tractor Feed (lower Tractor) P1 = 8 AFS, Bins 1 or 2 [1]) P1 = 9 ASF, Bins 2 or 3 [1]) P1 = 10 ASF, Bins 1 or 2 or 3 [1]) P1 = 15 upper and lower Tractor [1]) only for printer **PP 806**; [2]) not for **PP 809**
ESC [> ;P2 s *(Native Command)*	**AGC**	***Print Gap:*** P2 = 0 : Automatic Gap Control P2 = 1 Print Gap for 1-ply copy P2 = 2 Print Gap for 2-ply copies P2 = 3 Print Gap for 3-ply copies P2 = 4 Print Gap for 4-ply copies P2 = 5 Print Gap for 5-ply copies P2 = 6 Print Gap for 6-ply copies P2 = 7 Print Gap for 7-ply copies P2 = 8 Print Gap for 8-ply copies [4]) P2 = 9 Print Gap for 9-ply copies [4]) [4]) only for printer PP 803
ESC [> ;;P3 s *(Native Command)*	**PE**	***Paper Exit:*** P3 = 0 reserved (no change) P3 = 1 or 2 Paper Exit Front (manual) P3 = 3 : Batch output (rear), default
ESC [> ;;;P4 s *(Native Command)*	**CM**	***Cut Mode:*** P4 = 0 Cut Mode off P4 = 1 Cut Mode On P4 = 2 Cut on actual Line (cutting edge is approximate 4 mm above the base of the actual line) [3]) only active if CUT DEVICE is installed and activated.

Table 4: Horizontal Form Handling and Printing Modes

Escape Sequence	Mnemonic	Function
ESC :		***Select Elite (12 cpi)***
ESC - P1		***Cancel / Select Underline*** P1 = 0/0 cancel Underline Printing P1 = 0/1 set Underline Printing
ESC _ P1		***Cancel / Select Overline Printing*** P1 = 0/0 cancel Overline Printing P1 = 0/1 set Overline Printing
ESC [@ *EOT NUL NUL NUL* P1 P2		***Double, Multiple -Width/ - Height Mode*** P1 controls line spacing (e.g. 0/x) and character height (e.g. x/0) P2 controls character width P1 = 0/x line spacing unchanged P1 = 1/x single line space P1 = 2/x double line space P1 = 3/x triple line space P1 = 4/x quadruple line space P1 = x/0 charcter height unchanged P1 = x/1 single charcter height P1 = x/2 double character height P1 = x/3 triple character height P1 = x/4 quadruple character height P2 = 0/0 character width unchanged P2 = 0/1 single character width P2 = 0/2 double character width P2 = 0/3 triple character width P2 = 0/4 quadruple character width ***Example:*** Coding to select “double line space”, “double character height”, and “double character width” in Hex: 1B 5B 40 04 00 00 00 22 02
ESC D P1 P2 ... P32 *NUL*		***Set Horizontal Tabs*** (P1...P32 = 0/1...F/F)
ESC E		***Select Emphasized Printing (bold)***
ESC F		***Cancel Emphasized Printing (bold)***
ESC G		***Select Double Strike Printing (bold)***
ESC H		***Cancel Double Strike Printing***

Escape Sequence	Mnemonic	Function
ESC I P1		***Select Character Mode*** P1 = 0/0 : Draft, 10 cpi P1 = 0/1 : Draft, Proportional P1 = 0/2 : Courier, 10 cpi P1 = 0/3 : Courier, Proportional P1 = 0/8 : Draft, 12 cpi P1 = 0/A : Courier, 12 cpi P1 = 1/0 : Draft, 17 cpi P1 = 1/2 : Courier, 17 cpi
ESC P P1		***Cancel / Select Proportional Printing*** P1 = 0/0 or 0 : cancel Proportional P1 = 0/1 or 1 : select Proportional
ESC R		***Restore Horizontal Tabs to Default***
ESC S P1		***Select Superscript/Subscript*** P1 = 0/0 or 0 : select Superscript P1 = 0/1 or 1 : select Subscript
ESC T		***Cancel Superscript/Subscript***
ESC U P1		***Cancel / Select Unidirectional Printing*** P1 = 0/0 or 0 : cancel Unidirectional P1 = 0/1 or 1 : select Unidirectional
ESC W P1		***Cancel / Select Double Width*** P1 = 0/0 or 0 : cancel Double Width P1 = 0/1 or 1 : select Double Width
ESC X P1 P2		***Set Left and Right Margins*** P1 : Left Margin P2 : Right Margin (Pn = 0/0...F/F)
ESC d P1 P2		**Set Relative Horizontal Dot Position** (P1 + P2 x 256)/120" (Pn = 0/0...F/F)
ESC <		***Home Position of Printhead (left margin)***
ESC ;		***Set Left Margin at Current Position***
ESC [P1 SP r (*Native Command)*	**SPQ**	***Select Print Quality LQ / NLQ*** P1 = 0 :LQ P1 = 1 :NLQ; this is only valid if the NLQ type style is available. P1 = 2 :Draft P1 = 3 :HSD (High Speed Draft) ***Note:*** The LQ / NLQ selection becomes active if a LQ-/NLQ-font is selected. Draft / HSD becomes active if type style DATA is selected.

Escape Sequence	Mnemonic	Function
ESC [P1 ; P2 x (*Native Command)*	**CPL**	***Select Font and Character Pitch*** (parameter P1 or P2 may be skipped, see following alternative command sequences)
ESC [P1 x (*Native Command)*		***P1 Selects Font*** P1 = 0 or missing : Font is unchanged P1 = 1 : Data P1 = 2 : Roman P1 = 3 : Sans Serif P1 = 4 : Courier P1 = 5 : Prestige P1 = 6 : Script P1 = 7 : OCR-B P1 = 8 : OCR-A P1 = 9 : Orator-C P1 = 10 : Script P1 = 11 : Data Large ***Note:*** Data Block is not available
ESC [;P2 x (*Native Command)*		***P2 Selects Character Pitch*** P2 = 0 or missing : Pitch is unchanged P2 = 1 : 10 cpi P2 = 2 : 12 cpi P2 = 3 : 15 cpi P2 = 4 : (proportional) P2 = 5 : proportional P2 = 6 : 14.4 cpi P2 = 7 : 18 cpi P2 = 8 : 17.1 cpi P2 = 9 : 20 cpi

Table 5: Character Set Selection

Escape Sequence	Mnemonic	Function
ESC 6		***Select Character Set 2***
ESC 7		***Select Character Set 1***
ESC \ P1 P2		***Print from All Character Set*** Number of codes = (P1 + P2 * 256) (Pn = 0/0...F/F)
ESC ^ P1		***Print Single Character from All Character Set*** P1 = Number of Char. Set or Code Page (Pn = 0/0...F/F)
ESC [T n1 n2 NUL NUL P1 P2		***Code Page Switching*** n1 = 4, n2 = 0 P1, P2 for Code-Page number, most significant byte first. P1 P2 1 181 : CP 437 U.S.A. 3 82 : CP 850 Multilingual 3 90 : CP 858 Multilingual + Euro 3 92 : CP 860 Portugal 3 95 : CP 863 Canada - French 3 97 : CP 865 Norw

Table 6: Graphics Modes

Escape Sequence	Mnemonic	Function
ESC 3 P1		***Set Line Space*** P1/216 lpi (non AGM), P1/180 lpi (AGM) (P1 = 0/1...F/F)
ESC J P1		***Perform Line Feed*** P1/216 lpi (non AGM), P1/180 lpi (AGM) (P1 = 0/0...F/F)
ESC K P1 P2 v1 . . . vn		***Standard Density Graphics Mode *)*** (P1 + P2 * 256) = number of data (Pn = 0/0...F/F)
ESC L P1 P2 v1 . . . vn		***Double Density Graphics Mode *)*** (P1 + P2 * 256) = number of data (Pn = 0/0...F/F)

Escape Sequence	Mnemonic	Function
ESC Y P1 P2 v1 . . . vn		***Double Speed & Density Graphics Mode *)*** (P1 + P2 * 256) = number of data (Pn = 0/0...F/F)
ESC Z P1 P2 v1 . . . vn		***Quadruple Density Graphics Mode *)*** (P1 + P2 * 256) = number of data (Pn = 0/0...F/F) *) consecutive horizontal dots cannot be printed.
ESC [g P1 P2 P3 v1 . . . vn		***Select Various Graphics Modes (IBM)*** P1 + P2 * 256 = number of data bytes + 1 (P1,P2 = 0/0...F/F) v1 .. vn = binary data in hex code

Parameter Table Graphic Density P3:

P3	Graphic type	dots per column	max. of columns	hor. density (dpi)	ert. density no v AGM	vert. density AGM	
0/0	Standard Density (K)	8	816	60	72	60	
0/1	Double Density (L)	8	1632	120	72	60	
0/2	2xDensity / 2xSpeed (Y)	8	1632	120	72	60	*)
0/3	Quadruple Density (Z)	8	3264	240	72	60	*)
0/8	Standard Density	24	816	60	180	180	
0/9	Double Density	24	1632	120	180	180	
0/B	Triple Density	24	2448	180	180	180	
0/C	Hex Density	24	4896	360	180	180	*)

*) *consecutive horizontal dots cannot be printed.*

Example: box 8x8 dots with center point 2x2 dots, standard density, 8 dots column
Hex: 1B 5B 67 09 00 00 FF 81 81 99 99 81 81 FF

Table 7: Further Control Sequences, supported by IBM Emulation Mode

(Native Commands)

Escape Sequence	Alternative	Function
ESC [	$$	***Control String Introducer (CSI)*** for" ESC [HEX 1B 5B
ESC	$$/	***Control String Introducer (ESC)*** for "ESC" HEX 1B
ESC * P1 P2 P3 v1 . . . vn		***Select Various Graphics Modes*** P2 + P3 * 256 = number of columns (P2,P3 = 0/0...F/F) v1 .. vn = binary data in hex code

Parameter Table Graphic Density:

P1	Graphic type	dots per column	max. of columns	hor. density (dpi)	ert. density no v AGM	vert. density AGM	
0/0	Standard Density (K)	8	816	60	72	60	
0/1	Double Density (L)	8	1632	120	72	60	
0/2	2xDensity / 2xSpeed (Y)	8	1632	120	72	60	*)
0/3	Quadruple Density (Z)	8	3264	240	72	60	*)
0/4	CRT I	8	1088	80	72	60	
0/5	Plotter	8	979	72	72		
0/6	CRT II	8	1224	90	72	60	
0/B	Double Density Plotter	8	1958	144	72		*)
2/0	Standard Density	24	816	60	180	180	
2/1	Double Density	24	1632	120	180	180	
2/6	CRT III	24	1224	90	180	180	
2/7	Triple Density	24	2448	180	180	180	
2/8	Hex Density	24	4896	360	180	180	*)

*) *consecutive horizontal dots cannot be printed.*

Example: box 8x8 dots with center point 2x2 dots, standard density, 8 dots / column
Hex: 1B 2A 00 08 00 FF 81 81 99 99 81 81 FF

Escape Sequence	Alternative	Function
ESC [ESC [P1 ; P2 w	**SNVCT**	***Set National Version and Code Table*** P1 = 1 - 15 national version depending on selected character set (see Appendix C Char. Set Tables) P2 = 3 digit code of the code table (see command SCT) ***P1 for national version IBM SET 2:*** P1 = 1 : U.S.A P1 = 2 : France P1 = 3 : Germany P1 = 4 : U.K. P1 = 5 : Denmark P1 = 6 : Sweden P1 = 7 : Italy P1 = 8 : Spain P1 = 9 : Japan P1 = 1 0 : Norway P1 = 1 1 : Denmark 2 P1 = 1 2 : Spain 2 P1 = 1 3 : Latin AM P1 = 1 4 : Turkey
		P1 for IBM CODE PAGE: P1 = 1 : CP 437 P1 = 2 : CP 850 P1 = 3 : CP 860 P1 = 4 : CP 863 P1 = 5 : CP 865 P1 = 6 : CP 858
		P1 for CODE PAGE EE: P1 = 1 : CP 437 GK P1 = 2 : CP 851 GK P1 = 3 : CP 928 GK P1 = 4 : CP 855 CYRI P1 = 5 : CP 866 P1 = 6 : CP 869 P1 = 7 : CP 852

Escape Sequence	Alternative	Function
ESC [ESC [P1 ; P2 w	**SNVCT**	***P1 for CODE PAGE EE: (continou)*** P1 = 8 : KAMENICKY P1 = 9 : ISO LATIN 2 P1 = 1 0 : MAZOVIA P1 = 1 1 : CP 437 HUN P1 = 1 2 : CP 852 SEE P1 = 1 3 : CP 866 LAT P1 = 1 4 : WIN LAT2
		P1 for CODE PAGE EE2: P1 = 1 : CP 771 P1 = 2 : CP 773 P1 = 3 : CP 774 P1 = 4 : CP 775 P1 = 5 : CP BALTIC RIM
ESC [; P2 w	**SCT**	***Set Code Table*** P2 = 3 digit code of the code table P2 = 0 3 1 : ISO 8859/1; LATIN 1 P2 = 0 3 1 : ISO 8859/15; LATIN 9 P2 = 0 6 1 : IBM Set 1 P2 = 0 6 2 : IBM Set 2 P2 = 0 6 3 : IBM Code Page [1]) P2 = 0 7 1 : EPSON Ext. G. C. T P2 = 1 0 0 : CODE PAGES EE P2 = 1 0 1 : CODE PAGES EE2 [1]) depending on selected character set (P1) the IBM CODE PAGE 437, 850, 860, 863, 865, or 858 (P1 = 6; P2 = 63) will be activated!
ESC [P1 ; P2 SP r	**SM #**	***Select Macro and Change Emulation*** P1 = 1 : Macro 1 P1 = 2 : Macro 2 P1 = 3 : Macro 3 P1 = 4 : Macro 4 P2 = 0: no change of emulation P2 = 2: IBM ProPrinter Emulation P2 = 3: IBM ProPrinter AGM Emulation P2 = 4: EPSON Emulation
ESC M	**RLF**	***Reverse Line Feed***
ESC [< s	**EJF**	***Eject Form***

Escape Sequence	Alternative	Function
ESC [P1 ; P2 SP B	**GSM**	***Graphic Size Modification*** P1 = **100** / P2 = **100** :normal height/width P1 = **200** / P2 = **200** :double height/width P1 = **300** / P2 = **300** :triple height/width P1 = **400** / P2 = **400** :quadruple height/ width P1 and P2 max. = 800 in steps of ***100*** Graphic Size Modification for DATA LARGE P1 = **100** / P2 = **100** :normal height / width P1 and P2 max. 9900 in steps of ***100***
ESC [P1 `	**HPR**	***Set Horizontal Position Relative*** P1 = print column (P1 = 0...9999)
ESC [P1 b	**RPT**	***Repeat Character*** P1 = number of repetitions (P1 = 1...999)
ESC [P1 `	**HPA**	***Set Horizontal Position Absolute*** P1 = print column (P1 = 0...9999)
ESC [P1 a	**HPR**	***Set Horizontal Position Relative*** P1 = print column (P1 = 0...9999)
ESC [P1 d	**VPA**	***Set Vertical Position Absolute*** P1 = 0 or 1: Top of Form / Top Margin P1 = 2... 9999: Vertical Line
ESC [P1 e	**VPR**	***Set Vertical Position Relative*** P1 = 0 or 1: moves the position one line P1 = 2... 9999: Vertical Line
ESC [P1 g	**TBC**	***Tabulation Clear*** P1 = 0: at active print pos. all tabs and margin marker, P1 = 3: all horizontal-, P1 = 4: all vertical tabs and margin marker
ESC [P1 w	**SNV**	***Set National Version*** P1 = 1 - 15 national version depending on selected character set (see SNVCT and Appendix C Character Set Tables)
ESC [P1 {	**LSL**	***Line Space Load*** P1 = 1, 2, 3, 4, 6, 8, 12, 16, 24, 48, 60, 72, 90, 144, 180, 360

Escape Sequence	Alternative	Function
ESC [P1 m	**SGR**	***Set Graphic Rendition*** P1 = 0 : default - no rendition or rendition reset P1 = 1 : bold P1 = 3 : italics P1 = 4 : underline P1 = 9 : crossed out or strike through printing P1 = 20 : enlarged double width printing P1 = 21 : double underline P1 = 22 : bold reset P1 = 23 : italics reset P1 = 24 : underline reset P1 = 29 : crossed out reset P1 = 30 to 36 : ignored P1 = 53 : over lined P1 = 55 : over lined reset
ESC [; P2 ; P3 ; P4 ; P5 ; P6 ; P7 *SP* z **BARCODE Programming** see Appendix F	**BH**	***Barcode Header*** P2 : Barcode typ P3 : Height of barcode P4 : Width of the thin bars P5 : Width of the thin gaps P6 : Ratio width to thin (bars / gaps) P7 : Uni-or bi-directional printing 0 :or not programmed: means no changes 1 : uni-directional printing in LQ 2 : bi-directional printing in LQ 3 : uni-directional printing in NLQ 4 : bi-directional printing in NLQ
ESC [? 0 h	**SMBC**	***Set Mode Barcode*** (Start Barcode)
ESC [? 0 l	**RSBC**	***Reset Mode Barcode*** (Stop Barcode)
$$	**$$**	***Control String Introducer*** (CSI) for ESC [
$$ /	**$$ /**	***Control String Introducer*** (ESC) for ESC

Hex Code	Format	Page
00	Null	D-2
08	Backspace	D-2
09	Horizontal Tab	D-2
0A	Line Feed	D-2
0B	Vertical Tab	D-2
0C	Form Feed	D-2
0D	Carriage Return	D-2
0E	Select Double Width (one line)	D-2
0F	Select Condensed Mode (17,1 cpi)	D-2
11	Select Printer	D-2
12	Select Pica (10 cpi)	D-2
13	Buffer Data Flow Control	D-2
14	Cancel Double Width	D-2
18	Cancel Buffer	D-2
1B	Escape	D-2
20	Space	D-2
7F	Delete	D-2
1B 30	Set Line Space to 1/ 8“	D-3
1B 31	Set Line Space to 7/ 72“	D-3
1B 32	Start Variable Line Space	D-3
1B 34	Set Top Of Form	D-3
1B 36	Select Character Set 2	D-8
1B 37	Select CHaracter Set 1	D-8
1B 3A	Select Elite (12 cpi)	D-8
1B 3B	Set Left Margin at Current	D-6
1B 3C	Home Position of Printhead	D-6
1B 45	Select Emphasized Printing (bold)	D-5
1B 46	Cancel Emphasized Printing	D-5
1B 47	Select Double Strike (bold)	D-5
1B 48	Cancel Double Strike	D-5
1B 4D	Reverse Line Feed	D-12
1B 4F	Cancel Automatic Perforation Skip	D-3
1B 52	Restore Horizontal Tabs to Default	D-6
1B 54	Cancel Superscript/Subscript	D-7
1B 5D	Reverse Line Feed	D-3
24 24	Control String Introducer for ESC [	D-14
24 24 2F	Control String Introducer for ESC	D-14

Hex Code	Format	Page
1B 2D 00 / 1B 2D 01	Cancel / Select / Underline	D-5
1B 33 P1	Set Line Space to P1/216" (P1/180")	D-8
1B 35 01 / 1B 35 00	Carriage Return Function	D-3
1B 41 P1	Set Line Space to P1/72" (P1/60")	D-3
1B 43 P1	Set Form Length in Lines	D-3
1B 49 P1	Select Character Mode	D-6
1B 4A P1	Perform P1/216" (P1/180") Line feed	D-8
1B 4E P1	Set Automatic Perforation Skip	D-3
1B 50 00 / 1B 50 01	Cancel / Select Proportional Printing	D-6
1B 51 23 or 1B 51 24	Deselect Printer	D-2
1B 53 00 / 1B 53 01	Select Superscript / Subscipt	D-6
1B 55 00 / 1B 55 01	Cancel / Select Unidirectional Printing	D-5
1B 57 00 / 1B 57 01	Cancel / Select Double Width	D-6
1B 5E P1	Single Character from All Char. Set	D-8
1B 5F 00 / 1B 5F 01	Cancel / Select Overline Printing	D-5
1B 2A P1 P2 P3 data	Select Various Graphics Modes	D-10
1B 42 P1....P64 00	Set Vertical Tabs	D-3
1B 43 00 P1	Set Form Lenght in Inches	D-3
1B 44 P1...Pn 00	Set Horizontal Tabs	D-5
1B 4B P1 P2 data	Standard Density Graphics Mode	D-9
1B 4C P1 P2 data	Double Density Graphics Mode	D-8
1B 58 P1 P2	Set Left and Right Margins	D-6
1B 59 P1 P2 data	Double Speed & Double Density Graphics Mode	D-9
1B 5A P1 P2 data	Quadruple density Graphics Mode	D-9
1B 5B 3B P2 73	AGC / PCC Procedure	D-4
1B 5B 3B P2 77	Set Code Table	D-12
1B 5B 3B P2 3B P3 3B P4 3B P5 3B P6 3B P7 20 7A	Barcode Header	D-14
1B 5B 3C 73	Eject Form	D-12
1B 5B 3E 73	Insert Form	D-3
1B 5B 3E P1 3B P2 3B P3 73	Select Paper Source and Insert Form	D-4
1B 5B 3F 30 68	Set Mode Barcode	D-14
1B 5B 3F 30 6C	Reset Mode Barcode	D-14
1B 5B 40 04 00 00 00 P1 P2	Double, Multible -Width/-Height Mode	D-5
1B 5B 54 n1 n2 NUL NUL P1 P2	Code Page Switching	D-8
1B 5B 5C 04 00 00 00 P1 00	Set Line Space Unit	D-3
1B 5B 67 P1 P2 P3 data	Select Various Graphics Modes (IBM)	D-10
1B 5B P1 20 58	Select Print Quality LQ / NLQ	D-6

Hex Code	Format	Page
1B 5B P1 3B P2 20 72	Select Macro and Change Emulation	D-12
1B 5B P1 3B P2 20 42	Graphic Size Modification	D-13
1B 5B P1 3B P2 77	Set National Version and Code Table	D-12
1B 5B P1 3B P2 78	Select Font and Character Pitch	D-7
1B 5B P1 60	Set Horizontal Position Absolute	D-13
1B 5B P1 61	Set Horizontal Position Relative	D-13
1B 5B P1 62	Repeat Character	D-13
1B 5B P1 64	Set Vertical Position Absolute	D-13
1B 5B P1 65	Set Vertical Position Relative	D-13
1B 5B P1 67	Tabulation Clear	D-13
1B 5B P1 6D	Set Graphic Rendition	D-14
1B 5B P1 73	Select Paper Source	D-4
1B 5B P1 77	Set National Version	D-13
1B 5B P1 7B	Line Space Load	D-13
1B 5C P1 P2	Print from All Character Set	D-8
1B 64 P1 P2	Set Relative Horizontal Dot Position	D-6

Hex - Decimal Conversion Table

	0	1	2	3	4	5	6	7	8	9	A	B	C	D	E	F
0	0	16	32	48	64	80	96	112	128	144	160	176	192	208	224	240
1	1	17	33	49	65	81	97	113	129	145	161	177	193	209	225	241
2	2	18	34	50	66	82	98	114	130	146	162	178	194	210	226	242
3	3	19	35	51	67	83	99	115	131	147	163	179	195	211	227	243
4	4	20	36	52	68	84	100	116	132	148	164	180	196	212	228	244
5	5	21	37	53	69	85	101	117	133	149	165	181	197	213	229	245
6	6	22	38	54	70	86	102	118	134	150	166	182	198	214	230	246
7	7	23	39	55	71	87	103	119	135	151	167	183	199	215	231	247
8	8	24	40	56	72	88	104	120	136	152	168	184	200	216	232	248
9	9	25	41	57	73	89	105	121	137	153	269	185	201	217	233	249
A	10	26	42	58	74	90	106	122	138	154	170	186	202	218	234	250
B	11	27	43	59	75	91	107	123	139	155	171	187	203	219	235	251
C	12	28	44	60	76	92	108	124	140	156	172	188	204	220	236	252
D	13	29	45	61	77	93	109	125	141	157	173	189	205	221	237	253
E	14	30	46	62	78	94	110	126	142	158	174	190	206	222	238	254
F	15	31	47	63	79	95	111	127	143	159	175	191	207	223	239	255

Appendix E EPSON LQ ® Quick Reference

EPSON LQ 2550 and ESC/P Emulation

EPSON® is a registered trademark and EPSON Perfection ™ and Exceed Your Vision are trademarks of Seiko Epson Corporation

This appendix contains basic information on the EPSON LQ 2550, ESC/P2, and EPSON Barcodes Printer Emulation:

Characters used in control functions appear in monospaced type. Table 1 explains some of the conventions used.

A pair of numbers separated by a slash (/) character indicates Column/Row notation. This notation refers to the location of a character in a standard code table, such as ASCII. (example: 1/B = 1B is the hex-code for Escape)
Spaces appear between characters in sequence for clarity; they are not part of the format.

At the end of this chapter you will find a listing of the **EPSON LQ 2550, ESC/P2**, and EPSON Barcodes Emulation commands classified by Hex Code and a Hex- Decimal conversion table.

The following conventions are used in the command listings:

Table 1 Conventions

ESC	Escape (1/B), introduces an escape sequence
Pn	Numeric parameter, or number of units that specify a distance or quantity pertaining to the escape sequence, control function or control string. Accepted values are 0...9999, may be preceded by + or -. If the parameter is in normal notation like “200” the programming in hex- code is according to a ASCII table. (“200” = 32,30,30 in hex). If the parameter must be programmed in hex-code the notation is with a slash. (1/A = 1A in hex-code)
v1...vn	A series of parameters pertaining to the escape sequence, control function or control string.
SP	Is standing for Space (hex 20)

(Native Command)

additional PSi command usable for the original emulation. Controls PSi specific printer features that are not present in the original printer.

Table 2: Control Codes

Column/Row	Mnemonic	Function
0/0	**NUL**	***Null***
0/8	**BS**	***Backspace***
0/9	**HT**	***Horizontal Tab***
0/A	**LF**	***Line Feed***
0/B	**VT**	***Vertical Tab***
0/C	**FF**	***Form Feed***
0/D	**CR**	***Carriage Return***
0/E	**SO**	***Double Width Printing By Line***
0/F	**SI**	***Condensed Printing (17.1 cpi)***
1/1	**DC1**	***Select Printer***
1/2	**DC2**	***Select Pica (10 cpi)***
1/3	**DC3**	***Deselct Printer***
1/4	**DC4**	***Cancel Double Width Printing By Line***
1/8	**CAN**	***Cancel Buffer***
1/B	**ESC**	***Initiate Escape Sequence***
2/0	**SP**	***Space***
7/F	**DEL**	***Delete***

Table 3: Terminal Management

Escape Sequenz	Function
ESC @	***Initialize Printer***
ESC =	***Set Most Significant Bit to 0***
ESC >	***Set Most Significant Bit to 0***
ESC #	***Cancel Most Significant Bit Control***

Vertical Form Handling

The printer is always equipped with two continuous form tractors. The last sheet of a continuous form stack can be printed on up to the end of the form.

The capabillity of the printer to feed paper from different sources is optimally supplemented by the option that automatically adjust the distance between the print head and the print bar.

Table 4: Vertical Form Handling

Escape Sequenz	Function
ESC 0	***Set Line Space to 1/8”***
ESC 2	***Set Line Space to 1/6”***
ESC 3 P1	***Set Line Space to P1/180”*** (P1 =0/ 0...F/F)
ESC + P1	***Set Line Space to P1/360”*** (P1 = 0/0...F/F)
ESC A P1	***Set Line Space to P1/60”*** (P1 = 0/0...7/F)
ESC B NUL	***Clear Vertical Tabs***
ESC B P1 P2 . . P16 NUL	***Set Vertical Tabs*** (P1...P16 = 0/1...F/F)
ESC C P1	***Set Form Length in Lines*** (P1 = 0/1...7/F)
ESC C NUL P1	***Set Form Length in Inches*** (P1 = 0/1...1/6)
ESC J P1	***Perform P1/180” Line Feed*** (P1 = 0/0...F/F)
ESC N P	***Set Automatic Perforation Skip*** (P1 = 0/1...7/F) P1 is the number of lines from bottom of paper to skip.
ESC O	***Cancel Automatic Perforation Skip***
ESC b P1 P2 .. P16 NUL	***Set Vertical Tabs in Channel P1*** P1 = 0/0 .. 0/7 : channel 0 - 7 P2..P16 = line number (P2..P16 = 0/1..F/F)
ESC b P1 *NUL*	***Clear all Tabs in Channel*** P1 P1 = 0/0 .. 0/7 : channel 0 - 7
ESC j P1	***Perform $^{P1}/_{180}$ „Reverse Line Feed*** (P1 = 0/0...F/F)
ESC / P1	***Select Vertical Tab Channel*** P1 = 0/0 .. 0/7 : channel 0 .. 7
ESC *EM* P1	***Form Feed and ASF Control Form Feed***: EM = 1/9 *ASF Control:* P1 = 3/1: ASF Bin 1 or Bin 2 P1 = 3/2: ASF Bin 2 or Bin 3 P1 = 3/3: ASF Bin1 or Bin 2 or Bin 3 P1 = R: (5/2) eject sheet

Escape Sequenz	Mnemonic	Function
ESC [> P1 ; P2 ; P3 ; P4 s *(Native Command)*	**SPSIF**	***Select Paper Source and Insert Form*** (>), Select Paper Source,Print Gap, Paper Exit, Cut Mode.
ESC [> P1 s *(Native Command)*	**SPS**	***Select Paper Source:*** P1 = 0 Manual Feed [2]) P1 = 1 ASF, Bin 1 [1]) P1 = 2 ASF, Bin 2 [1]) P1 = 3 ASF, Bin 3 [1]) P1 = 6 upper Tractor P1 = 7 Tractor Feed (lower Tractor) P1 = 8 AFS, Bins 1 or 2 [1]) P1 = 9 ASF, Bins 2 or 3 [1]) P1 = 10 ASF, Bins 1 or 2 or 3 [1]) P1 = 15 upper and lower Tractor [1]) only for printer **PP 806**; [2]) not for **PP 809**
ESC [> ;P2 s *(Native Command)*	**AGC**	***Print Gap:*** P2 = 0 : Automatic Gap Control P2 = 1 Print Gap for 1-ply copy P2 = 2 Print Gap for 2-ply copies P2 = 3 Print Gap for 3-ply copies P2 = 4 Print Gap for 4-ply copies P2 = 5 Print Gap for 5-ply copies P2 = 6 Print Gap for 6-ply copies P2 = 7 Print Gap for 7-ply copies P2 = 8 Print Gap for 8-ply copies [4]) P2 = 9 Print Gap for 9-ply copies [4]) [4]) only for printer PP 803
ESC [> ;;P3 s *(Native Command)*	**PE**	***Paper Exit:*** P3 = 0 reserved (no change) P3 = 1 or 2 Paper Exit Front (manual) P3 = 3 : Batch output (rear), default
ESC [> ;;;P4 s *(Native Command)*	**CM**	***Cut Mode:*** P4 = 0 Cut Mode off P4 = 1 Cut Mode On P4 = 2 Cut on actual Line (cutting edge is approximate 4 mm above the base of the actual line) [3]) only active if CUT DEVICE is installed and activated.

Table 5: Horizontal Form Handling and Printing Modes

Escape Sequenz	Mnemonic	Function
ESC *SO*		***Select Double Width for One Line***
ESC *SI*		***Select Condensed*** 10 cpi -> 17 cpi 12 cpi -> 20 cpi 15 cpi -> 15 cpi (unchanged) proportional -> proportional cond.
ESC *SP* P1		***Select Intercharacter Space*** Unit 1/120" for DRAFT (P1 = 0/0...7/F) Unit 1/180" for NLQ/LQ (P1 = 0/0...7/F)
ESC ! P1		***Select Multiple Print*** Mode P1 selects: Bit 0 = 0 : 10 cpi (Pica) Bit 0 = 1 : 12 cpi (Elite) Bit 1 = 1 : proportional Bit 2 = 1 : Condensed Bit 3 = 1 : Emphasized Bit 4 = 1 : Double Strike Bit 5 = 1 : Double Width Bit 6 = 1 : Italics Bit 7 = 1 : Underline
ESC $ P1 P2		***Set Absolute Horizontal Position*** (P1 + P2 * 256) * $^1/_{60}$ " (P1 = 0/0...F/F) (P2 = 0/0...0/3)
ESC \ P1 P2		***Set Relative Horizontal Position*** **Draft**: (P1 + P2 * 256) * 1/120" (P1 = 0/0...F/F) (P2 = 0/0...0/6) **NLQ/LQ**: (P1 + P2 * 256) * 1/180" (P1 = 0/0...F/F) (P2 = 0/0...0/3)
ESC % P1		***Select Standard / User Defined Character Set*** P1 = 0/0 : Standard Character Set P1 = 0/1 : User Defined Character Set
ESC 4		***Set Italics***
ESC 5		***Cancel Italics***

Escape Sequenz	Mnemonic	Function
ESC (- P1 P2 P3 P4 P5		***Select Line Marking*** P1 = 0/3 (fixed value) P2 = 0/0 (fixed value) P3 = 0/1 (fixed alue) P4 = 0/1 : underline P4 = 0/2 : strike through P4 = 0/3 : overscore P5 = 0/0 : cancel score line selected by P4 P5 = 0/1 : single continuous line P5 = 0/2 : double continuous line P5 = 0/5 : single broken line P5 = 0/6 : double broken line
ESC <		***Select Unidirectional Mode (one line)***
ESC : NUL P1 NUL		***Copy ROM Character Set to RAM*** P1 = 0/0 : ROMAN P1 = 0/1 : SANS SERIF P1 = 0/2 : COURIER P1 = 0/3 : PRESTIGE P1 = 0/4 : SCRIPT P1 = 0/5 : OCR-B P1 = 0/6 : OCR-A P1 = 0/7 : ORATOR-C P1 = 0/8 : ORATOR
ESC & *NUL* P1 P2 P3 P4 P5 v1 .. vn		***Define User Defined Characters*** P1 = first code table position (P1 = 0/0...P2) P2 = last code table position (P2 = P1...7/F) P3 = front space (P3 = 0/0...5/0) P4 = body length Draft: (P4 = 0/0...0/F) LQ: (P4 = 0/0...2/5) P5 = rear space (P5 = 0/0...5/0) v1 .. vn = binary data in hex (vn = 0/0...F/F)

Notes: This Command defines one or more characters in a RAM character table.
All User Defined Characters are erased when the printer is switched off.
Set the Interface Buffer to 1k or 8K (max 50 defined char in LQ, 128 in draft), or use a RAM card for up to 128 User Defined Characters in LQ. Set maximum every second dot to “1” in a horizontal line! User Defined Characters can be defined in four different print modes:resolution (vertical x horizontal)
Normal Size with Draft: 24 x 15
Normal Size with LQ / proport.: 24 x 37
Sub-/ Superscript with Draft: 16 x 15 Sub-/ Superscript
with LQ/proport. 16 x 37
The characters can only be activated in the same mode as defined. The character layout is coded in three bytes (24 bit vertical) or two bytes (16 bit vertical) per column, top to bottom.
To print the character change to the User Defined Character Set with ESC %
Example: vertical box, normal size with draft at code table position “41” (P3=8, P4=5, P5=8)
hex: 1B 26 00 41 41 08 05 08 FF FF FF 00 00 00 80 00 01 00 00 00 FF FF FF

Escape Sequenz	Mnemonic	Function
ESC - P1		***Underline Printing*** P1 = 0/1 : set Underline Printing P1 = 0/0 : cancel Underline Printing
ESC D *NUL*		***Clear Horizontal Tabs***
ESC D P1 P2 . . . P32 NUL		***Set Horizontal Tabs*** P1 ... P32 = tab position (Pn = 0/1..F/F)
ESC E		***Select Emphasized Printing (bold)***
ESC F		***Cancel Emphasized Printing***
ESC G		***Select Double Strike Printing (bold)***
ESC H		***Cancel Double Strike Printing***
ESC M		***Select Elite (12 cpi)***
ESC P		***Select Pica (10 cpi)***
ESC Q P1		***Set Right Margin*** (P1 = 0/4 ... F/F)
ESC S P1		***Select Superscript/Subscript*** P1 = 0/0 or 3/0 : select Superscript P1 = 0/1 or 3/1 : select Subscript
ESC T		***Cancel Superscript/Subscript***
ESC U P1		***Cancel/Select Unidirectional Printing*** P1 = 0/0 or 3/0 : cancel Unidirectional P1 = 0/1 or 3/1 : select Unidirectional
ESC W P1		***Cancel/Select Double Width*** P1 = 0/0 or 3/0 : cancel Double Width P1 = 0/1 or 3/1 : select Double Width
ESC a P1		***Select Justification*** P1 = 0/0 : select left justification P1 = 0/1 : center between margins P1 = 0/2 : select right justification P1 = 0/3 : select full justification
ESC g		***Select Pitch 15 cpi***
ESC | P1		***Set Left Margin*** (P1 = 0/0...F/C)
ESC p P1		***Cancel/Select Proportional*** P1 = 0/0 or 3/0 : cancel proportional P1 = 0/1 or 3/1 : select proportional

Escape Sequenz	Mnemonic	Function
ESC k P1		***Select Font*** P1 = 0/0 : ROMAN P1 = 0/1 : SANS SERIF P1 = 0/2 : COURIER P1 = 0/3 : PRESTIGE P1 = 0/4 : SCRIPT P1 = 0/5 : OCR-B P1 = 0/6 : OCR-A P1 = 0/7 : ORATOR-C P1 = 0/8 : ORATOR P1 = 1/1 : DATA LARGE
ESC q P1		***Select Character Style*** P1 = 0/0 : normal style P1 = 0/1 : outline P1 = 0/2 : shadow P1 = 0/3 : outline + shadow
ESC w P1		***Cancel/Select Double Height*** P1 = 0/0 or 3/0 : cancel P1 = 0/1 or 3/1 : select
ESC x P1		***Select Character Quality*** P1 = 0/0 or 3/0 : select Draft P1 = 0/1 or 3/1 : select LQ or NLQ dep. on set-up
ESC [P1 ; P2 SP B (*Native Command)*	**GSM**	***Graphic Size Modification*** P1 = 100 / P2 = 100 : normal height / width P1 = 200 / P2 = 200 : double height / width P1 = 300 / P2 = 300 : triple height / width P1 = 400 / P2 = 400 : quadruple height / width P1 and P2 max. = 800 in steps of 100 Graphic Size Modification for FONT DATA LARGE P1 = 100 / P2 = 100 : normal height / width P1 and P2 max. 9900 in steps of 100
ESC [P1 SP r (*Native Command)*	**SPQ**	***Select Print Quality LQ / NLQ*** P1 = 0 :LQ P1 = 1 :NLQ; this is only valid if the NLQ type style is available. P1 = 2 :Draft P1 = 3 :HSD (High Speed Draft) ***Note:*** The LQ / NLQ selection becomes active if a LQ-/NLQ-font is selected. Draft / HSD becomes active if type style DATA is selected.

Escape Sequenz	Mnemonic	Function
ESC [P1 ; P2 x (*Native Command)*	**CPL**	***Select Font and Character Pitch*** (parameter P1 or P2 may be skipped, see following alternative command sequences)
ESC [P1 x (*Native Command)*		***P1 Selects Font*** P1 = 0 or missing : Font is unchanged P1 = 1 : Data P1 = 2 : Roman P1 = 3 : Sans Serif P1 = 4 : Courier P1 = 5 : Prestige P1 = 6 : Script P1 = 7 : OCR-B P1 = 8 : OCR-A P1 = 9 : Orator-C P1 = 10 : Script P1 = 11 : Data Large ***Note:*** Data Block is not available
ESC [;P2 x (*Native Command)*		***P2 Selects Character Pitch*** P2 = 0 or missing : Pitch is unchanged P2 = 1 : 10 cpi P2 = 2 : 12 cpi P2 = 3 : 15 cpi P2 = 4 : (proportional) P2 = 5 : proportional P2 = 6 : 14.4 cpi P2 = 7 : 18 cpi P2 = 8 : 17.1 cpi P2 = 9 : 20 cpi

Table 6: Graphic Modes

Escape Sequenz	Mnemonic	Function
ESC ? K P1		***Reassign Graphics Mode K*** [1)] Standard Density, 8 per column
ESC ? L P1		***Reassign Graphics Mode L*** [1)] Double Density, 8 dot per column
ESC ? Y P1		***Reassign Graphics Mode Y*** [1)] Double Density / Speed, 8 dot per col.
ESC ? Z P1		***Reassign Graphics Mode Z 1)*** Quadruple Density, 8 dot per column

Escape Sequenz	Mnemonic	Function
ESC K P2 P3 v1 . . . vn		***Standard Density Graphics Mode*** [1)]
ESC L P2 P3 v1 . . . vn		***Double Density Graphics Mode*** [1)]
ESC Y P2 P3 v1 . . . vn		***Double Density / Double Speed Graphics Mode*** [1)]
ESC Z P2 P3 v1 . . . vn		***Quadruple Density Graphics Mode*** [1)]
[1)]: for coding of P1, P2, P3 see **ESC *** next table		
ESC * P1 P2 P3 v1 . . . vn		***Select Various Graphics Modes*** P2 + P3 * 256 = number of columns v1 .. vn (0/0...F/F) binary data in hex code (0/0...F/F

Parameter Table Graphic Density:

P1	Graphic type	dots /	max. number	hor. density	
		column	of columns	(dpi)	
0/0	Standard Density (K)	8	816	60	
0/1	Double Density (L)	8	1632	120	
0/2	2xDensity / 2xSpeed (Y)	8	1632	120	*)
0/3	Quadruple Density (Z)	8	3264	240	*)
0/4	CRT I	8	1088	80	
0/6	CRT II	8	1224	90	
2/0	Standard Density	24	816	60	
2/1	Double Density	24	1632	120	
2/6	CRT III	24	1224	90	
2/7	Triple Density	24	2448	180	
2/8	Hex Density	24	4896	360	*)

*) *consecutive horizontal dots cannot be printed.*

Table 7: Character Set Selection

Escape Sequenz	Mnemonic	Function
ESC 6		***Enlarge Print Code Area (128-159 dec.)***
ESC 7		***Enable Upper Control Code (128-159 dec.)***
ESC R P1		***Select National Version*** P1 = 0/0 : U.S.A. P1 = 0/1 : FRANCE P1 = 0/2 : GERMANY P1 = 0/3 : U.K. P1 = 0/4 : DENMARK P1 = 0/5 : SWEDEN P1 = 0/6 : ITALY P1 = 0/7 : SPAIN P1 = 0/8 : JAPAN P1 = 0/9 : NORWAY P1 = 0/A : DENMARK 2 P1 = 0/B : SPAIN 2 P1 = 0/C : LATIN AM. P1 = 0/D : TURKEY P1 = 4/0 : LEGAL
ESC t P1		***Select Character Table*** P1 = 0/0 : Italics Character Table P1 = 0/1 : Extended Graphics Character Table P1 = 0/2 : User Defined Character Table

Table 8: ESC / P2 Commands

Escape Sequenz	Function
ESC (c P1 P2 P3 P4 P5	***Set page format*** Sets top and bottom margins in the defined units. P1 = 04 00 tm = P2 + P3 x 256 tm: top margin in units bm = P4 + P5 x 256 bm: bottom margin in units
ESC (C P1 P2 P3	***Set page length in defined unit*** Define page length in units P1 = 02 00 pl = P2 + P3 x 256
ESC (V P1 P2 P3	***Set absolute vertical print position*** Define absolute vertical print position in units P1 = 02 00 avpp = P2 + P3 x 256 avpp: define print position from top margin in defined units

Escape Sequenz	Function
ESC (v P1 P2 P3	***Set relative vertical print position*** Define relative vertical print position in units P1 = 02 00 rvpp = P2 + P3 x 256 rvpp: moves the print position in defined units.
ESC X P1 P2 P3	***Select font by pitch and point*** P1 = 0 : No change in pitch P1 = 1 : Selects proportional spacing P1 = 18, 24, 30, 36, 42, 48, 60 or 72 Selects fixed pitch equal to 360/m cpi pz = P2 + P3 x 256 pz: Point size in 0,5 points; 1 point equals 1/72 inch pz = 0: No change in point size pz = 16, 20, 21, 24, 28, 32, 36, 40, 42, 44, 48, 52, 56, 60, 64
ESC (U P1 P2	***Set unit*** P1 = 01 00 P2 = 10, 20, 30, 40, 50, 60 /3600” P2 = 10; Standard
ESC c P1 P2	***Set horizontal motion index (HMI)*** Define HMI-Index Change pitch value in n/360”-steps HMI = P1 + P2 x 256 HMI max. 3 inch
ESC (t n1 n2 Pn P1 P2	***Assign character table*** n1 = 3, n2 = 0 Pn = Parameter of ESC t : 0, 1, 2, 3, “0”, “1”, “2” or “3” P1 P2 = character table 0 0 : italic 1 0 : PC 437 (USA) 3 0 : PC 850 (Multilingual) 7 0 : PC 860 (Portugal) 8 0 : PC 863 (French-Canada) 8 0 : PC 865 (Norway) 29 15 : ISO 8859-15; LATIN 9 29 16 : ISO 8859-1, LATIN 1 44 0 : PC 858 (Multilingual + Euro) The character table assigned by Pn is one of the four tables which will be selected by the ESC t command.
ESC (^ P1 P2	***Print data as characters*** Prints n data bytes as characters, not control codes pd = P1 + P2 x 256

Escape Sequenz	Function
ESC t P1	***Select character table*** Selects the character table to be used for printing from among the four character tables which are assigned by ESC (t command. Pn = 0/0 or 3/0 : Character Table 0 Pn = 0/1 or 3/1 : Character Table 1 Pn = 0/2 or 3/2 : Character Table 2 Re-maps downloaded Characters from the positions 0 to 127 to the positions 128 to 255. Pn = 0/3 or 3/3 : Character Table 3 **Default Setting** Pn = 0/0 or 3/0 : Italics Character Table Pn = 0/1 or 3/1 : CP 437 Pn = 0/2 or 3/2 : User Defined Character Table Pn = 0/3 or 3/3 : CP 437
ESC (G P1 P2	***Select graphics mode*** P1 = 01 00 P2 = 1 or 49 Graphics mode may be reset by ESC @.
ESC . P1 P2 P 3 P4 P5 P6	***Print raster graphics*** P1 = 0 : graphics mode non compressed P1 = 1 : graphics mode compressed P2 = 10, 20 : vertical resolution in 3600/v DPI P3 = 10, 20 : horizontal resolution in 3600/h DPI P4 : vertical dot count (rows of dot graphics) 1 < P4 < 24 hzd : horizont dot count (columns of dot graphics) hzd = P5 + P6 x 256 Combination P2 = 10, P3 = 20 is not possible.

Table 9: EPSON Barcodes Commands

Escape Sequenz	Function
ESC (B P1 P2 k m s v1 v2 c *(BarCodeData)*	***Specify and Print barcode*** P1 P2 number of data bytes to follow: 6 bytes + number of BarCodeData = P1 + P2 x 256 k specifies the barcode type: k = 0/2 Interleaved 2 of 5 k = 0/5 Code 39 k = 06 Code 128 m specifies the module width (unit 1/180 inch) m = 0/2 2 dots (default) m = 0/3 3 dots m = 0/4 4 dots m = 0/5 5 dots s specifies the space adjustment value (unit 1/360 inch) -3 <= s <= 3 (F/D <= s <= 0/3) v1 and v2 specifies the bar length (v1+v2x256) (unit 1/180 inch) range : 45/180 inch <= bar legth <= 8.25 inch c specifies the control flag .bit 0 : Check digit 0: host generates check digit 1: printer generates check digit bit 1 : human readable character 0: print hr character ; 1: no print of character bit 2 to bit 7 : reserved Actual number of barcode data Interleaved 2 of 5 : 2 .. 255 Code 39 : 1 .. 255 Code 128 : 2 .. 255 Valid range of BarCodeData Interleaved 2 of 5 : 0 9 (30H 39H) Code 39 : 0 9 (30H 39H), (41H - 5AH) (20H, 24H, 25H, 2BH, 2DH, 2EH, 2FH) Code 128 : uses the code sets A, B, and C

	Code set A	Code set B	Code Set C
Data characters	x00 x5F	x20 - x7F	x30 x39
Code A	-	x1E	x3B
Code B	x64	-	x3A
Code C	x63	x1C	-
Shift	x62	x1B	-
FNC 1	x66	x1F	x3C
FNC 2	x61	x1A	-
FNC 3	x60	x19	-
FNC 4	x65	x1D	-

Table 10: Further Control Sequences, supported by EPSON LQ Emulation Mode

(Native Commands)

Escape Sequence	Alternative	Function
ESC [ESC [P1 ; P2 w	**SNVCT**	***Set National Version and Code Table*** P1 = 1 - 15 national version depending on selected character set (see Appendix C Char. Set Tables) P2 = 3 digit code of the code table (see command SCT) ***P1 for national version IBM SET 2:*** P1 = 1 : U.S.A P1 = 2 : France P1 = 3 : Germany P1 = 4 : U.K. P1 = 5 : Denmark P1 = 6 : Sweden P1 = 7 : Italy P1 = 8 : Spain P1 = 9 : Japan P1 = 1 0 : Norway P1 = 1 1 : Denmark 2 P1 = 1 2 : Spain 2 P1 = 1 3 : Latin AM P1 = 1 4 : Turkey
		P1 for IBM CODE PAGE: P1 = 1 : CP 437 P1 = 2 : CP 850 P1 = 3 : CP 860 P1 = 4 : CP 863 P1 = 5 : CP 865 P1 = 6 : CP 858
		P1 for CODE PAGE EE: P1 = 1 : CP 437 GK P1 = 2 : CP 851 GK P1 = 3 : CP 928 GK P1 = 4 : CP 855 CYRI P1 = 5 : CP 866 P1 = 6 : CP 869 P1 = 7 : CP 852

Escape Sequence	Alternative	Function
ESC [ESC [P1 ; P2 w	**SNVCT**	***P1 for CODE PAGE EE: (continou)*** P1 = 8 : KAMENICKY P1 = 9 : ISO LATIN 2 P1 = 1 0 : MAZOVIA P1 = 1 1 : CP 437 HUN P1 = 1 2 : CP 852 SEE P1 = 1 3 : CP 866 LAT P1 = 1 4 : WIN LAT2
		P1 for CODE PAGE EE2: P1 = 1 : CP 771 P1 = 2 : CP 773 P1 = 3 : CP 774 P1 = 4 : CP 775 P1 = 5 : CP BALTIC RIM
ESC [; P2 w	**SCT**	***Set Code Table*** P2 = 3 digit code of the code table P2 = 0 3 1 : ISO 8859/1; LATIN 1 P2 = 0 3 1 : ISO 8859/15; LATIN 9 P2 = 0 6 1 : IBM Set 1 P2 = 0 6 2 : IBM Set 2 P2 = 0 6 3 : IBM Code Page [1]) P2 = 0 7 1 : EPSON Ext. G. C. T P2 = 1 0 0 : CODE PAGES EE P2 = 1 0 1 : CODE PAGES EE2 [1]) depending on selected character set (P1) the IBM CODE PAGE 437, 850, 860, 863, 865, or 858 (P1 = 6; P2 = 63) will be activated!
ESC [P1 ; P2 SP r	**SM #**	***Select Macro and Change Emulation*** P1 = 1 : Macro 1 P1 = 2 : Macro 2 P1 = 3 : Macro 3 P1 = 4 : Macro 4 P2 = 0: no change of emulation P2 = 2: IBM ProPrinter Emulation P2 = 3: IBM ProPrinter AGM Emulation P2 = 4: EPSON Emulation
$$	**$$**	***Control String Introducer*** (CSI) for ESC [
$$ /	**$$ /**	***Control String Introducer*** (ESC) for ESC

Escape Sequence	Alternative	Function
ESC [< s	**EJF**	***Eject Form***
ESC [P1 ; P2 SP B	**GSM**	***Graphic Size Modification*** P1 = **100** / P2 = **100** :normal height/width P1 = **200** / P2 = **200** :double height/width P1 = **300** / P2 = **300** :triple height/width P1 = **400** / P2 = **400** :quadruple height/ width P1 and P2 max. = 800 in steps of ***100*** Graphic Size Modification for DATA LARGE P1 = **100** / P2 = **100** :normal height / width P1 and P2 max. 9900 in steps of ***100***
ESC [P1 m	**SGR**	***Set Graphic Rendition*** P1 = 0 : default - no rendition or rendition reset P1 = 1 : bold P1 = 3 : italics P1 = 4 : underline P1 = 9 : crossed out or strike through printing P1 = 20 : enlarged double width printing P1 = 21 : double underline P1 = 22 : bold reset P1 = 23 : italics reset P1 = 24 : underline reset P1 = 29 : crossed out reset P1 = 30 to 36 : ignored P1 = 53 : over lined P1 = 55 : over lined reset

Escape Sequence	Alternative	Function
ESC [; P2 ; P3 ; P4 ; P5 ; P6 ; P7 *SP* z **BARCODE Programming** see Appendix F	**BH**	***Barcode Header*** P2 : Barcode typ P3 : Height of barcode P4 : Width of the thin bars P5 : Width of the thin gaps P6 : Ratio width to thin (bars / gaps) P7 : Uni-or bi-directional printing 0 :or not programmed: means no changes 1 : uni-directional printing in LQ 2 : bi-directional printing in LQ 3 : uni-directional printing in NLQ 4 : bi-directional printing in NLQ
ESC [? 0 h	**SMBC**	***Set Mode Barcode*** (Start Barcode)
ESC [? 0 l	**RSBC**	***Reset Mode Barcode*** (Stop Barcode)
CSI	**$$**	***Control String Introducer*** (CSI) for ESC [$$ can be used instead of 1B 5B if $$ Emulation is set to on
ESC	**$$/**	***Control String Introducer*** (ESC) for ESC $$/ can be used instead of 1B if $$ Emulation is set to on

Hex Code	Format	Page
00	Null	E-2
08	Backspace	E-2
09	Horizontal Tab	E-2
0A	Line Feed	E-2
0B	Vertical Tab	E-2
0C	Form Feed	E-2
0D	Cariage Return	E-2
11	Select Printer	E-2
12	Cancel Condensed Mode	E-2
13	Deselect Printer	E-2
14	Cancel Double Width	E-2
18	Cancel Buffer	E-2
1B	Escape	E-2
20	Space	E-2
7F	Delete	E-2
1B 0E or 0E	Select Double Width for One Line	E-5
1B 0F or 0F	Select Condensed Mode	E-5
1B 23	Cancel Most Significant Bit Control	E-2
1B 30	Set Line Space to $^{1}/_{8}$ "	E-3
1B 32	Set Line Space to $^{1}/_{6}$ "	E-3
1B 34	Set Italics	E-5
1B 35	Cancel Italics	E-5
1B 36	Enlarge Print Code Area	E-11
1B 37	Enable Upper Control Code Area	E-11
1B 3C	Select Unidirectional Mode (one line)	E-6
1B 3D	Set Most Significant Bit to 0	E-2
1B 3E	Set Most Significant Bit to 1	E-2
1B 40	Initialize Printer	E-2
1B 45	Select Emphasized (bold)	E-7

Hex Code	Format	Page
1B 46	Cancel Emphasized	E-7
1B 47	Select Double Strike (bold)	E-7
1B 48	Cancel Double Strike	E-7
1B 4D	Select Elite (12 cpi)	E-7
1B 4F	Cancel Automatic Perforation Skip	E-3
1B 50	Select Pica (10 cpi)	E-7
1B 54	Cancel Superscript/Subscript	E-7
1B 67	Select Pitch 15 cpi	E-7
24 24	Control String Introducer for ESC [	E-18
24 24 2F	Control String Introducer for ESC	E-18
1B 19 P_1	Form Feed	E-2
1B 20 P_1	Select Intercharacter Space	E-5
1B 21 P_1	Select Multible Print Mode	E-5
1B 25 00 / 1B 25 01	Select Standard- / User Defined Char. Set	E-5
1B 2B P_1	Set line Space to $^{P1}/_{360}$ "	E-3
1B 2E P_1	Select Vertical Tab Channel	E-3
1B 2D 01 / 1B 2D 00	Select / Cancel Underline	E-7
1B 33 P_1	Set Line Space to $^{P1}/_{180}$ "	E-3
1B 41 P_1	Set line Space to $^{P1}/_{60}$ "	E-3
1B 42 00	Clear Vertical Tabs	E-3
1B 43 P_1	Set Form Length in Lines	E-3
1B 44 00	Clear Horizontal Tabs	E-7
1B 4A P_1	Perform $^{P1}/_{180}$ Line Feed	E-3
1B 4E P_1	Set Automatic Perforation Skip	E-3
1B 51 P_1	Set Right Margin	E-7
1B 52 P_1	Set National Version	E-11
1B 53 00 / 1B 53 01	Select Superscript / Subscript	E-7
1B 55 00 / 1B 55 01	Cancel / Select Unidirectional Printing	E-7
1B 57 00 / 1B 57 01	Cancel / Select Double Width	E-7

Hex Code	Format	Page
1B 61 P_1	Select Justification	E-7
1B 6A P_1	Perform $^{P1}/_{180}$ Reverse Line Feed	E-3
1B 6B P_1	Select Font	E-8
1B 6C P_1	Set Left Margin	E-7
1B 70 00 / 1B 70 01	Cancel / Select Proportional	E-7
1B 71 P_1	Select Character Style	E-8
1B 74 P_1	Select Character Table	E-13
1B 77 00 / 1B 77 01	Cancel / Select Double Height	E-8
1B 78 P_1	Select Character Quality	E-8
1B 24 P_1 P_2	Set Absolute Horizontal Position	E-5
1B 26 00 P_1 P_2 P_3 P_4 P_5 data	Define User Defined Characters	E-6
1B 28 2D P_1 P_2 P_3 P_4 P_5	Select Line Marking	E-6
1B 28 43 P_1 P_2 P_3	Set Page Length in defined Unit	E-11
1B 28 47 P_1 P_2	Select Graphics Mode	E-13
1B 28 55 P_1 P_2	Set Unit	E-12
1B 28 56 P_1 P_2 P_3	Set absolute vertical Print Position	E-12
1B 28 63 P_1 P_2 P_3 P_4 P_5	Set Page Format	E-11
1B 28 74 P_1 P_2 P_3 P_4	Assign Character Table	E-12
1B 28 76 P_1 P_2 P_3	Set relative vertical Print Position	E-11
1B 28 5E P_1 P_2	Print Data as Character	E-12
1B 2A P_1 P_2 P_3 data	Select Various Graphics Modes	E-10
1B 2E P_1 P_2 P_3 P_4 P_5 P_6	Print Raster Graphics	E-13
1B 3A 00 P_1 00	Copy ROM Character Set to RAM	E-6
1B 3E 4B P_1	Reassign Graphics Mode K	E-9
1B 3E 4C P_1	Reassign Graphics Mode L	E-9
1B 3E 59 P_1	Reassign Graphics Mode Y	E-9
1B 3E 5A P_1	Reassign Graphics Mode Z	E-9
1B 42 P_1....P_{16} 00	Set Vertical Tabs	E-3
1B 43 00 P_1	Set form Length in Inches	E-3

Hex Code	Format	Page
1B 44 P_1 P_2...P_{32} 00	Set Horizontal Tabs	E-9
1B 4B P_2 P_3 data	Standard Density Graphics Mode	E-13
1B 4C P_2 P_3 data	Double Density Graphics Mode	E-13
1B 58 P_1 P_2 P_3	Select Font by Pitch and Point	E-13
1B 59 P_2 P_3 data	Double Speed & Double Density Graph. Mode	E-13
1B 5A P_2 P_3 data	Quadruple Density Graphics Mode	E-13
1B 5B 3B P_2 73	AGC / PCC Procedure	E-5
1B 5B 3B P_2 77	Set Code Table	E-21
1B 5B 3B P_2 3B P_3 3B P_4 3B P_5 3B P_6 3B P_7 20 7A	Barcode Printing	E-22
1B 5B 3C 73	Eject Form	E-20
1B 5B 3E 73	Insert Form	E-20
1B 5B 3E P_1 3B P_2 3B P_3 3B P_4 73	Select Paper Source and Insert Form	E-4
1B 5B 3E 30 68	Set Mode Barcode	E-22
1B 5B 3E 30 6C	Reset Mode Barcode	E-22
1B 5B P_1 20 58	Select Print Quality	E-20
1B 5B P_1 3B P_2 20 72	Select Makro and Change Emulation	E-20
1B 5B P_1 3B P_2 20 42	Graphic Size Modification	E-11
1B 5B P_1 3B P_2 77	Set National Version and Code Table	E-21
1B 5B P_1 3B P_2 78	Select Font and Character Pitch	E-12
1B 5B P_1 77	Set National Version	E-21
1B 5C P_1 P_2	Set Relative Horizontal Position	E-6
1B 62 P_1 00	Clear Vertical Tabs in Channel P_1	E-4
1B 62 m P_1 P_2...P_9 00	Set Vertical Tab in Channel P_1	E-4
1B 63 P_1 P_2	Set Horizontal Motion Index (HMI)	E-17

Hex - Decimal Conversion Table

	0	1	2	3	4	5	6	7	8	9	A	B	C	D	E	F
0	0	16	32	48	64	80	96	112	128	144	160	176	192	208	224	240
1	1	17	33	49	65	81	97	113	129	145	161	177	193	209	225	241
2	2	18	34	50	66	82	98	114	130	146	162	178	194	210	226	242
3	3	19	35	51	67	83	99	115	131	147	163	179	195	211	227	243
4	4	20	36	52	68	84	100	116	132	148	164	180	196	212	228	244
5	5	21	37	53	69	85	101	117	133	149	165	181	197	213	229	245
6	6	22	38	54	70	86	102	118	134	150	166	182	198	214	230	246
7	7	23	39	55	71	87	103	119	135	151	167	183	199	215	231	247
8	8	24	40	56	72	88	104	120	136	152	168	184	200	216	232	248
9	9	25	41	57	73	89	105	121	137	153	269	185	201	217	233	249
A	10	26	42	58	74	90	106	122	138	154	170	186	202	218	234	250
B	11	27	43	59	75	91	107	123	139	155	171	187	203	219	235	251
C	12	28	44	60	76	92	108	124	140	156	172	188	204	220	236	252
D	13	29	45	61	77	93	109	125	141	157	173	189	205	221	237	253
E	14	30	46	62	78	94	110	126	142	158	174	190	206	222	238	254
F	15	31	47	63	79	95	111	127	143	159	175	191	207	223	239	255

Appendix F Barcode Quick Reference

Introduction

The barcode print facility is available in all three emulations.

Programming
There are three escape sequences to print barcodes

The first sequence is to define the Barcode Header. The type of barcode as well as all parameters are selected by a header. The header does not affect any parameters outside the barcode application and remains valid until another header is transmitted or the printer is turned off. This can be done at any time but before barcode printing.

The header has the following format:
ESC [; P2 ; P3 ; P4 ; P5 ; P6 ; P7 ␣ z Note: ␣ = Space

In step two, the ESC-sequence „Set Mode Barcode (SMBC)“ starts the barcode printing.
ESC [? 0 h

Finally, the ESC-sequence „Reset Mode Barcode (RMBC)“ will stop printing.
ESC [? 0 l

Note: Between SMBC and RMBC are only printable characters tolerated (no CR or LF).

Barcode Header

Format	Function/Parameter	Hex Code
BH	Barcode Header P_2 = Barcode type; P_3 = Height of barcode; P_4 = Width of thin bars; P_5 = Width of thin gaps; P_6 = Ratio width to height; P_7 = Uni/Bidirectional printing	1B 5B 3B P_2 3B P_3 3B P_4 3B P_5 3B P_6 3B P_7 20 7A
SMBC	Start of Barcode	1B 5B 3F 30 68
RMBC	Stop Barcode	1B 5B 3F 30 6C

Barcode Header Parameters

Barcode Type

Parameter	Description	Function
P2	***Barcode Type***	Horizontal, Vertical with or without readable Text • default = 101 (Code 39 horizontal

Type	horizontal	horizontal + human readable text	vertical	vertical + human readable text
Code 39	101	201	301	401
2 of 5 industrial	102	202	302	402
2 or 5 interleaved	103	203	303	403
Codabar (Monarch)	104	204	304	404
EAN 8	105	205	not applicable	not applicable
EAN 13	106	206	not applicable	not applicable
Code 93	107	207	307	407

Type	horizontal	horizontal + human readable text	vertical	vertical + human readable text
MSI Mod 10/10	108	208	308	408
UPC-E	109	209	not applicable	not applicable
UPC-A	110	210	not applicable	not applicable
Code 128 (EAN 128)	111	211	311	411
Postnet	112	not applicable	not applicable	not applicable
KIX RM4SCC, U.K.	113	not applicable	not applicable	not applicable

Barcode Height

Parameter	Description	Function
P3	***Height of barcode***	• default: $^{3}/_{12}$ „ - 0.64 cm All characters in a line are automatically repeated according to the selected barcode height. This is also true for plain text! P3 * $^{1}/_{12}$ “ – possible values from: 0 to 40 (30_H to 34_H30_H) or (48_D to 52_D48_D) for vertical barcodes 0 to 99 (30_H to 39_H39_H) or (48_D to 57_D57_D) for horizontal barcodes

Barcode	Height in % of barcode length	minimum height in mm
Code 39	25	20 (0.8")
Codabar	25	20 (0.8")
Code 93	15	6.25 (0.25")
Code 128	15	6.25 (0.25")

Barcode Width (Thin bars)

Parameter	Description	Function
P4	***Width of the thin bars***	• default: $^{2}/_{144}$ = 0.35 mm ***Note:*** The width of bars and gaps should be equal. For this, the parameters P4 and P5 should not deviate more than one step

for horizontal Barcode

P4	hex	dec	inch	mm
0	30	48	2/144	0,35
1	31	49	3/144	0,53
2	32	50	4/144	0,70
3	33	51	5/144	0,88
4	34	52	6/144	1,05
5	35	53	7/144	1,23
6	36	54	8/144	1,41
7	37	55	9/144	1,58

for vertical Barcode

P4	hex	dec	inch	mm
0	30	48	2/180	0,28
1	31	49	3/180	0,42
2	32	50	4/180	0,56
3	33	51	5/180	0,70
4	34	52	6/180	0,85
5	35	53	7/180	0,99
6	36	54	8/180	1,12
7	37	55	9/180	1,27

Barcode Width (Thin gaps)

Parameter	Description	Function
P5	***Width of the thin gaps***	• default: $^{2}/_{180}$ = 0.35 mm ***Note:*** The width of bars and gaps should be equal. For this, the parameters P4 and P5 should not deviate more than one step

for horizontal Barcode

P4	hex	dec	inch	mm
0	30	48	2/144	0,35
1	31	49	3/144	0,53
2	32	50	4/144	0,70
3	33	51	5/144	0,88
4	34	52	6/144	1,05
5	35	53	7/144	1,23
6	36	54	8/144	1,41
7	37	55	9/144	1,58

for vertical Barcode

P4	hex	dec	inch	mm
0	30	48	2/180	0,28
1	31	49	3/180	0,42
2	32	50	4/180	0,56
3	33	51	5/180	0,70
4	34	52	6/180	0,85
5	35	53	7/180	0,99
6	36	54	8/180	1,12
7	37	55	9/180	1,27

Barcode Ratio Width to Thin

Parameter	Description	Function
P6	***Ratio Width to Thin***	• default: **0** (2 to 1))

P6	Code 39 2 of 5 industrial 2 of 5 interleaved Codabar Code 93 MSI mod 10/10 Code 128	EAN 8 EAN 13 UPC-A UPC-E
0	2.0 to 1	SC3
1	2.5 to 1	SC6
2	3.0 to 1	SC9
3	3.5 to 1	SC3

Note: Code 93, MSI 10/10, Code 128 are fixed 2.0 to 1
Best results for Code 39, 2 of 5 industrial, 2 of 5 interleaved and Codabar with 2.5 to 1

Barcode Printing Direction

Parameter	Description	Function
P7	***Uni-directional or bi-directional printing***	values are: 0 or not programmed means no changes 1 uni-directional printing in LQ 2 bi-directional printing in LQ 3 uni-directional printing in NLQ 4 bi-directional printing in NLQ

Start Position of Barcode Printing

The start position for barcode printing is the current print position. For both horizontal and vertical printing, the print position after printing barcodes is the same line as the start position next to the barcode printed.

Barcode Programming Examples

Note: All examples are coded in standard uni-directional printing - that means the parameter "P7" is not used.

In the following examples, stands for "Space".
print position. The red ■ square before and after the printed
barcode indicates the actual print position.
Between Start Barcode and Stop Barcode are only printable characters tolerated
(no CR or LF).

Barcode Example for Code 39 (with redable Text)

Barcode Header: ESC[; P2 ; P3 ; P4 ;P5 ; P6 ;P7 ␣ z
ASCII ESC[; 201 ;8 ;1 ; 1; 1 ; ␣ z
HEX 1B 5B 3B 32 30 31 3B 38 3B 31 3B 31 3B 31 3B 20 7A

Start Barcode: ASCII ESC [? 0 h
HEX 1B 5B 3E 30 68

Data: ASCII * C O D E ␣ ␣ 3 9 *

Info: The start / stop characters (*) must be given in the text.

Stop Barcode: ASCII ESC [? 0 l
HEX 1B 5B 3E 30 6C

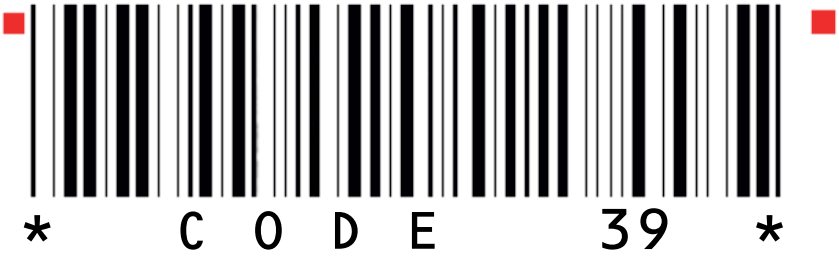

Barcode Example for 2 of 5 industriel (with redable Text)

Barcode Header: ESC[; P2 ; P3 ; P4 ;P5 ; P6 ;P7 ␣ z
ASCII ESC[; 202 ;8 ;1 ; 1; 1 ; ␣ z
HEX 1B 5B 3B 32 30 32 3B 38 3B 31 3B 31 3B 31 3B 20 7A

Start Barcode: ASCII ESC [? 0 h
HEX 1B 5B 3E 30 68

Data: ASCII : 1 2 3 4 5 6 7 8 9 0 ;

Info: The start / stop characters (:/;) must be given in the text.

Stop Barcode: ASCII ESC [? 0 l
HEX 1B 5B 3E 30 6C

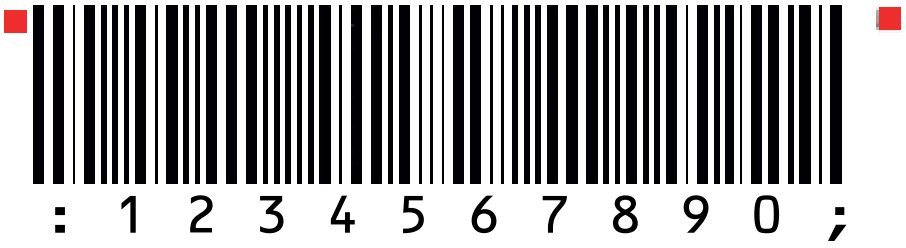

Barcode Example for 2 of 5 interleaved (with redable Text)

Barcode Header: ESC[; P2 ; P3 ; P4 ;P5 ; P6 ;P7 ␣ z
ASCII ESC[; 203 ;8 ;1 ; 1; 1 ; ␣ z
HEX 1B 5B 3B 32 30 33 3B 38 3B 31 3B 31 3B 31 3B 20 7A

Start Barcode: ASCII ESC [? 0 h
HEX 1B 5B 3E 30 68

Data: ASCII : 1 2 3 4 5 6 7 8 9 0 ;

Info: The start / stop characters (:/;) must be given in the text.

Stop Barcode: ASCII ESC [? 0 l
HEX 1B 5B 3E 30 6C

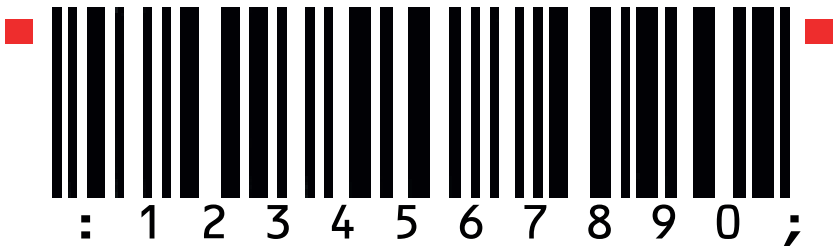

Barcode Example for Codabar Monarch (with redable Text)

Barcode Header: ESC[; P2 ; P3 ; P4 ;P5 ; P6 ;P7 ␣ z
ASCII ESC[; 204 ;8 ;1 ; 1; 1 ; ␣ z
HEX 1B 5B 3B 32 30 34 3B 38 3B 31 3B 31 3B 31 3B 20 7A

Start Barcode: ASCII ESC [? 0 h
HEX 1B 5B 3E 30 68

Data: ASCII : 0 1 2 3 4 5 6 7 8 90 ;

Info: The start / stop characters (a/t) must be given in the text.

Stop Barcode: ASCII ESC [? 0 l
HEX 1B 5B 3E 30 6C

Barcode Example for EAN 8 (with redable Text)

Barcode Header: ESC[; P2 ; P3 ; P4 ;P5 ; P6 ;P7 ␣ z
ASCII ESC[; 205 ;8 ; ; ; ; ␣ z
HEX 1B 5B 3B 32 30 35 3B 38 3B 3B 3B 3B 20 7A

Start Barcode: ASCII ESC [? 0 h
HEX 1B 5B 3E 30 68

Data: ASCII 4 0 1 2 3 4 5 5

Info: No Start or Stop character needed

Stop Barcode: ASCII ESC [? 0 l
HEX 1B 5B 3E 30 6C

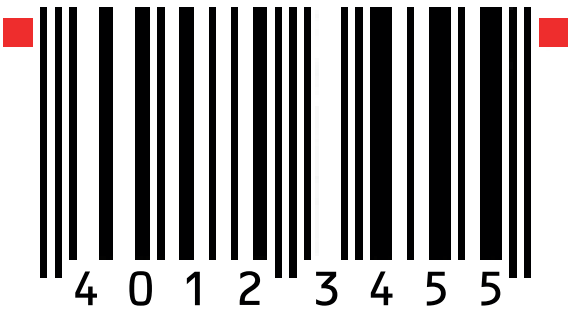

Barcode Example for EAN 8 ADD-5 (with redable Text)

Barcode Header: ESC[; P2 ; P3 ; P4 ;P5 ; P6 ;P7 ␣ z
ASCII ESC[; 205 ;8 ; ; ; ; ␣ z
HEX 1B 5B 3B 32 30 35 3B 38 3B 3B 3B 3B 20 7A

Start Barcode: ASCII ESC [? 0 h
HEX 1B 5B 3E 30 68

Data: ASCII 4 0 1 2 3 4 5 5 1 2

Info: No Start or Stop character needed

Stop Barcode: ASCII ESC [? 0 l
HEX 1B 5B 3E 30 6C

Barcode Example for EAN 8 ADD-5 (with redable Text)

Barcode Header: ESC[; P2 ; P3 ; P4 ;P5 ; P6 ;P7 ␣ z
ASCII ESC[; 205 ;8 ; ; ; ; ␣ z
HEX 1B 5B 3B 32 30 35 3B 38 3B 3B 3B 3B 20 7A

Start Barcode: ASCII ESC [? 0 h
HEX 1B 5B 3E 30 68

Data: ASCII 4 0 1 2 3 4 5 5 8 6 1 0 4

Info: No Start or Stop character needed

Stop Barcode: ASCII ESC [? 0 l
HEX 1B 5B 3E 30 6C

Barcode Example for EAN 13 (with redable Text)

Barcode Header: ESC[; P2 ; P3 ; P4 ;P5 ; P6 ;P7 ␣ z
ASCII ESC[; 206 ;8 ; ; ; ; ␣ z
HEX 1B 5B 3B 32 30 36 3B 38 3B 3B 3B 3B 20 7A

Start Barcode: ASCII ESC [? 0 h
HEX 1B 5B 3E 30 68

Data: ASCII 4 1 2 3 4 5 6 7 8 9 0 1 8

Info: No Start or Stop character needed

Stop Barcode: ASCII ESC [? 0 l
HEX 1B 5B 3E 30 6C

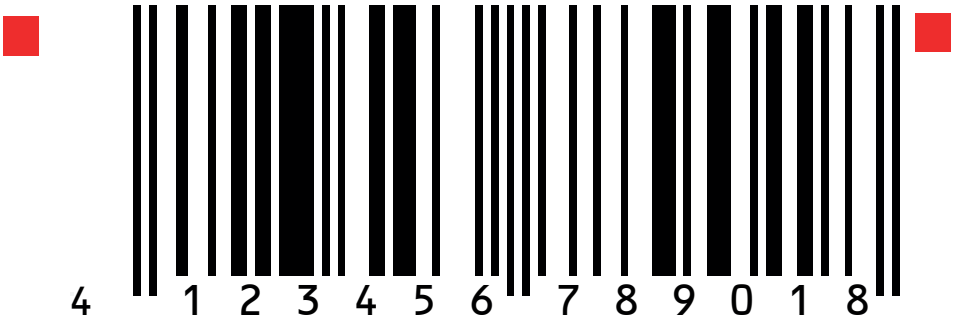

Barcode Example for EAN 13 ADD-2 (with redable Text)

Barcode Header: ESC[; P2 ; P3 ; P4 ;P5 ; P6 ;P7 ␣ z
ASCII ESC[; 206 ;8 ; ; ; ; ␣ z
HEX 1B 5B 3B 32 30 36 3B 38 3B 3B 3B 3B 20 7A

Start Barcode: ASCII ESC [? 0 h
HEX 1B 5B 3E 30 68

Data: ASCII 4 1 2 3 4 5 6 7 8 9 0 1 8 1 2

Info: No Start or Stop character needed

Stop Barcode: ASCII ESC [? 0 l
HEX 1B 5B 3E 30 6C

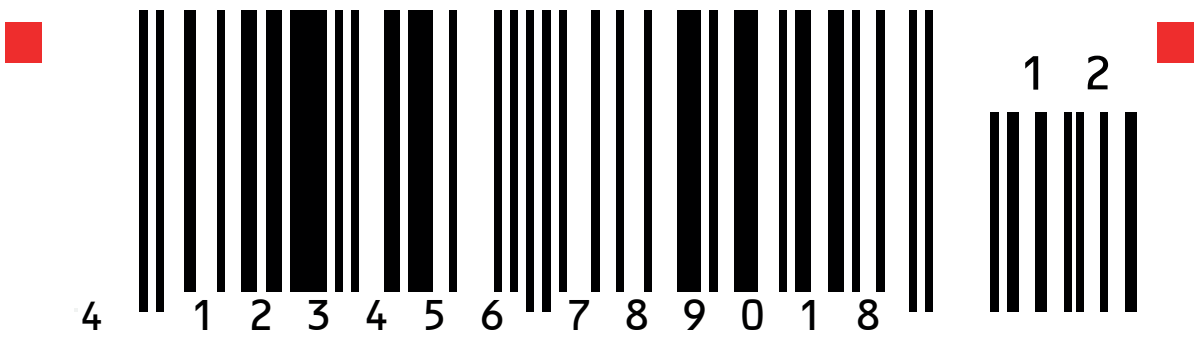

Barcode Example for EAN 13 ADD-5 (with redable Text)

Barcode Header: ESC[; P2 ; P3 ; P4 ;P5 ; P6 ;P7 ␣ z
ASCII ESC[; 206 ;8 ; ; ; ␣ z
HEX 1B 5B 3B 32 30 36 3B 38 3B 3B 3B 3B 20 7A

Start Barcode: ASCII ESC [? 0 h
HEX 1B 5B 3E 30 68

Data: ASCII 4 1 2 3 4 5 6 7 8 9 0 1 8 8 6 1 0 4

Info: No Start or Stop character needed

Stop Barcode: ASCII ESC [? 0 l
HEX 1B 5B 3E 30 6C

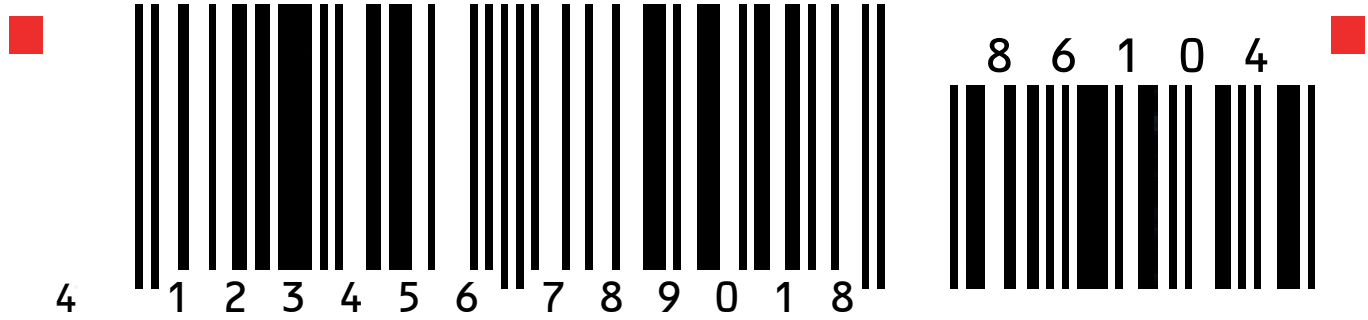

Barcode Example for Codabar Monarch (with redable Text)

Barcode Header: ESC[; P2 ; P3 ; P4 ;P5 ; P6 ;P7 ␣ z
ASCII ESC [; 207 ;8 ;1 ; 1; 1 ; ␣ z
HEX 1B 5B 3B 32 30 37 3B 38 3B 31 3B 31 3B 31 3B 20 7A

Start Barcode: ASCII ESC [? 0 h
HEX 1B 5B 3E 30 68

Data: ASCII a C + O + D + E ␣ 9 3 W I e

Info: The start / stop characters (a/e) must be given in the text.

Stop Barcode: ASCII ESC [? 0 l
HEX 1B 5B 3E 30 6C

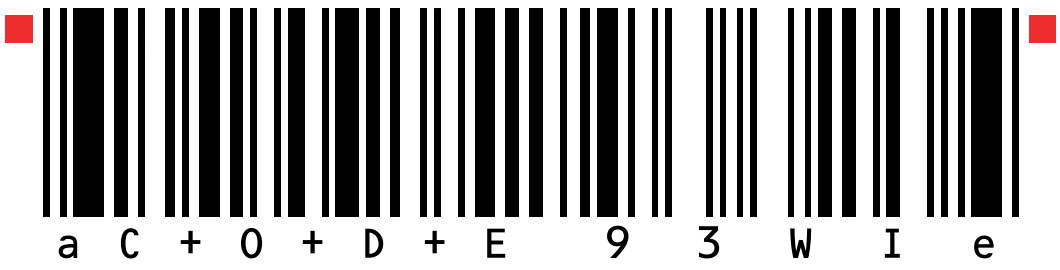

Barcode Example for MSI Mod 10/10 (with redable Text)

Barcode Header: ESC[; P2 ; P3 ; P4 ;P5 ; P6 ;P7 ␣ z
ASCII ESC[; 208 ;8 ; ; ; ; ␣ z
HEX 1B 5B 3B 32 30 38 3B 38 3B 3B 3B 3B 20 7A

Start Barcode: ASCII ESC [? 0 h
HEX 1B 5B 3E 30 68

Data: ASCII 1 2 3 4 5 6 74 1

Info: The start / stop characters (:/;) must be given in the text.

Stop Barcode: ASCII ESC [? 0 l
HEX 1B 5B 3E 30 6C

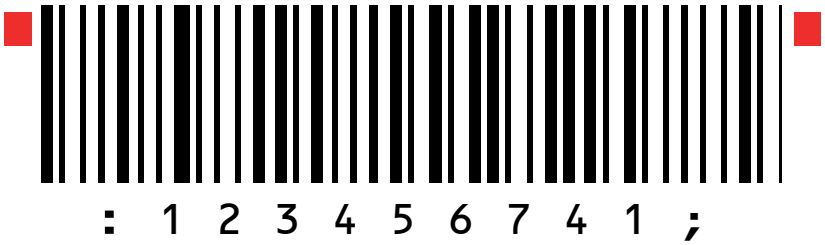

Barcode Example for UPC-E (with redable Text)

Barcode Header: ESC[; P2 ; P3 ; P4 ;P5 ; P6 ;P7 ␣ z
ASCII ESC [;209 ;8 ;1 ; 1; 1 ; ␣ z
HEX 1B 5B 3B 32 30 39 3B 38 3B 31 3B 31 3B 31 3B 20 7A

Start Barcode: ASCII ESC [? 0 h
HEX 1B 5B 3E 30 68

Data: ASCII 0 1 2 3 4 5 6 5

Stop Barcode: ASCII ESC [? 0 l
HEX 1B 5B 3E 30 6C

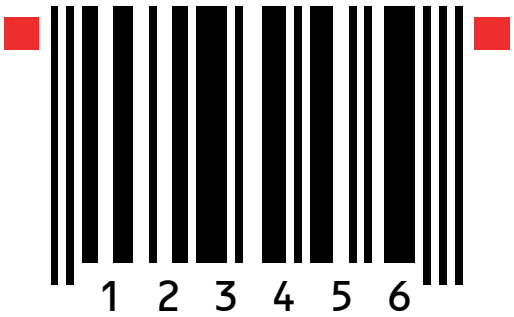

Barcode Example for UPC-E ADD-2 (with redable Text)

Barcode Header: ESC[; P2 ; P3 ; P4 ;P5 ; P6 ;P7 ␣ z
ASCII ESC [;209 ;8 ;1 ; 1; 1 ; ␣ z
HEX 1B 5B 3B 32 30 39 3B 38 3B 31 3B 31 3B 31 3B 20 7A

Start Barcode: ASCII ESC [? 0 h
HEX 1B 5B 3E 30 68

Data: ASCII 0 1 2 3 4 5 6 5 1 2

Stop Barcode: ASCII ESC [? 0 l
HEX 1B 5B 3E 30 6C

Barcode Example for UPC-E ADD-5 (with redable Text)

Barcode Header: ESC[; P2 ; P3 ; P4 ;P5 ; P6 ;P7 ␣ z
ASCII ESC [;209 ;8 ;1 ; 1; 1 ; ␣ z
HEX 1B 5B 3B 32 30 39 3B 38 3B 31 3B 31 3B 31 3B 20 7A

Start Barcode: ASCII ESC [? 0 h
HEX 1B 5B 3E 30 68

Data: ASCII 0 1 2 3 4 5 6 5 8 6 1 0 4

Stop Barcode: ASCII ESC [? 0 l
HEX 1B 5B 3E 30 6C

Barcode Example for UPC-A (with redable Text)

Barcode Header: ESC[; P2 ; P3 ; P4 ;P5 ; P6 ;P7 ␣ z
ASCII ESC [;210 ;8 ;1 ; 1; 1 ; ␣ z
HEX 1B 5B 3B 32 31 30 3B 38 3B 31 3B 31 3B 31 3B 20 7A

Start Barcode: ASCII ESC [? 0 h
HEX 1B 5B 3E 30 68

Data: ASCII 1 2 3 4 5 6 8 9 0

Stop Barcode: ASCII ESC [? 0 l
HEX 1B 5B 3E 30 6C

Barcode Example for UPC-A ADD-2 (with redable Text)

Barcode Header: ESC[; P2 ; P3 ; P4 ;P5 ; P6 ;P7 ␣ z
ASCII ESC [;210 ;8 ;1 ; 1; 1 ; ␣ z
HEX 1B 5B 3B 32 31 30 3B 38 3B 31 3B 31 3B 31 3B 20 7A

Start Barcode: ASCII ESC [? 0 h
HEX 1B 5B 3E 30 68

Data: ASCII 1 2 3 4 5 6 8 9 0

Stop Barcode: ASCII ESC [? 0 l
HEX 1B 5B 3E 30 6C

Barcode Example for UPC-A ADD-5 (with redable Text)

Barcode Header: ESC[; P2 ; P3 ; P4 ;P5 ; P6 ;P7 ␣ z
ASCII ESC [;210 ;8 ;1 ; 1; 1 ; ␣ z
HEX 1B 5B 3B 32 31 30 3B 38 3B 31 3B 31 3B 31 3B 20 7A

Start Barcode: ASCII ESC [? 0 h
HEX 1B 5B 3E 30 68

Data: ASCII 1 2 3 4 5 6 8 9 0 8 6 1 0 4

Stop Barcode: ASCII ESC [? 0 l
HEX 1B 5B 3E 30 6C

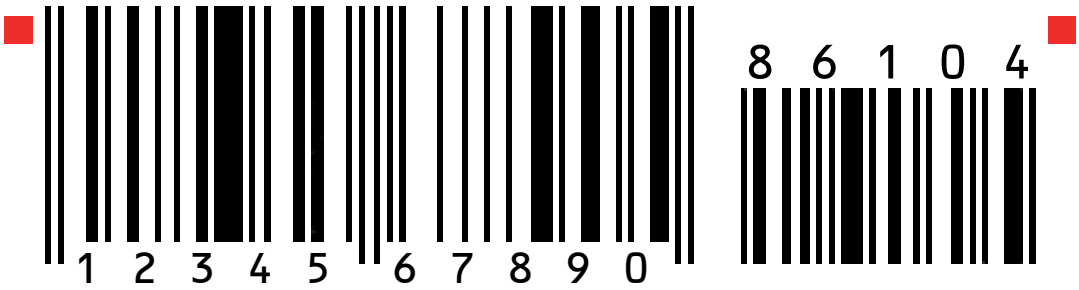

Barcode Example for Code 128 (with redable Text)

Barcode Header: ESC[; P2 ; P3 ; P4 ;P5 ; P6 ;P7 ␣ z
ASCII ESC [;211 ;8 ;1 ; 1; 1 ; ␣ z
HEX 1B 5B 3B 32 31 31 3B 38 3B 31 3B 31 3B 31 3B 20 7A

Start Barcode: ASCII ESC [? 0 h
HEX 1B 5B 3E 30 68

Data: ASCII Code 128

Stop Barcode: ASCII ESC [? 0 l
HEX 1B 5B 3E 30 6C

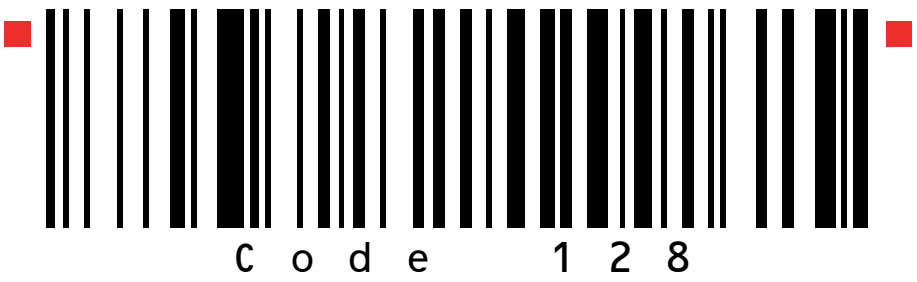

Barcode Example for Code 128 (with redable Text)
Code 128 using FNC1 = Coding] C 1

Barcode Header: ESC[; P2 ; P3 ; P4 ;P5 ; P6 ;P7 ␣ z
ASCII ESC [;211 ;8 ;1 ; 1; 1 ; ␣ z
HEX 1B 5B 3B 32 31 31 3B 38 3B 31 3B 31 3B 31 3B 20 7A

Start Barcode: ASCII ESC [? 0 h
HEX 1B 5B 3E 30 68

Data: ASCII **] C 1 0 0 3 4 0 1 2 3 4 5 1 2 3 4 5 6 7 8 9 5**

Stop Barcode: ASCII ESC [? 0 l
HEX 1B 5B 3E 30 6C

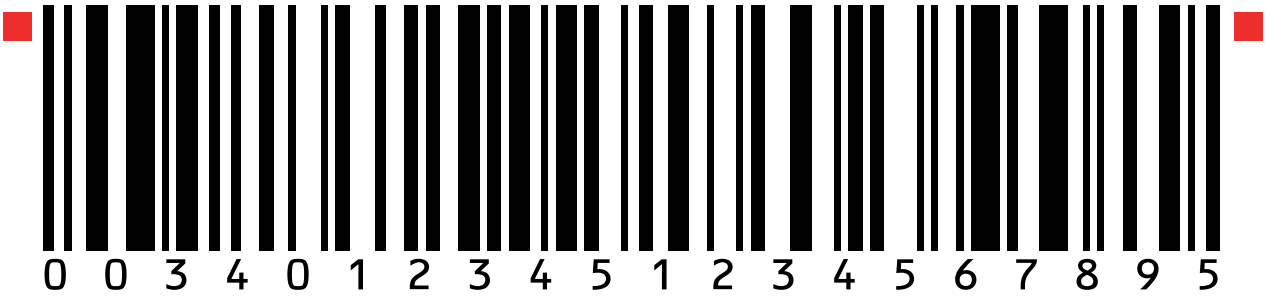

Barcode Example for POSTNET

Barcode Header: ESC[; P2 ; P3 ; P4 ;P5 ; P6 ;P7 ␣ z
ASCII ESC [;212 ; ; ; ; ; ␣ z
HEX 1B 5B 3B 32 31 32 3B 38 3B 31 3B 31 3B 31 3B 20 7A

Start Barcode: ASCII ESC [? 0 h
HEX 1B 5B 3E 30 68

Data: ASCII 1 2 3 4 5 6 7 8 9 0 1

Stop Barcode: ASCII ESC [? 0 l
HEX 1B 5B 3E 30 6C
Data: ASCII CR CR LS
Mark Pollan CR LF
101 main St CR LF
Anytown US 12345-6789 CR LF

Mark Pollan
101 main St
Anytown US 12345-6789

Barcode Example for KIX - PTT, Post Nederland (Klant IndeX) RM4SCC, U.K. (Royal Mail 4 State Customer Code)

Barcode Header: ESC[; P2 ; P3 ; P4 ;P5 ; P6 ;P7 ␣ z
ASCII ESC [;213 ; ; ; ; ; ␣ z
HEX 1B 5B 3B 32 31 32 3B 38 3B 31 3B 31 3B 31 3B 20 7A

Start Barcode: ASCII ESC [? 0 h
HEX 1B 5B 3E 30 68

Data: ASCII 1 2 3 4 5 6 7 8 9 0

Stop Barcode: ASCII ESC [? 0 l
HEX 1B 5B 3E 30 6C

All Barcodes can also be printer in landscape mode, depanding on Barcode Header.